MECHANICAL DOOR LOCKS

BODA

ABLOY

An ASSA ABLOY Group company

BJÖRKBODA

BJÖRKBODA LÅS OY AB – LONG TRADITIONS, MODERN PRODUCTS

The Björkboda factory has long traditions. It was established already in 1732 and has manufactured locks since 1887.

Björkboda Lås Oy Ab is today the leading producer of interior door locks in Scandinavia. Our extensive range of products also includes ABLOY and BODA cylinder locks for both main and interior doors as well as high security BODA lever locks for doors and gun cabinets.

Our aim is to develop, market and manufacture innovative quality lock cases both for our present and our new expanding markets.

We are proud of our dedicated skilled workforce and modern production methods. We have partners throughout Europe, and exports account for approximately half of our turnover.

Björkboda Lås Oy Ab´s quality system is certified by Det Norske Veritas and conforms to the SFS-ISO 9001 standard.

ISO 9001

DNV

QUALITY ASSURED FIRM

CONTENTS

Applications 2
Finishes 2
Locks with automatic deadlocking 2
Preventing use of the snib 2
Handing 3
Cylinders 3
Dimensions & mortises 3
Microswitch locks 3

Locks and latches for interior doors

414 4
4249 4
4238 4
2020 5
2014 5
2011 5
2016 6
2018 6
4260 6
4570 7
9456 7
4290 7
4291 8
4240 8
4241 8
4242 9
4250 9
4251 9
4252 10

Lock cases for wooden doors

LC 100 11
4190 11
4190T 11
4193 12
4195 12
4195T 12
4197 13
4960 13
LC 206/4560 13
LC 200/4565 14
LC 202 14
LC 203 14
LC 204/4180 15
LC 205 15
LC 208/4598 15
LC 210 16
4865 16
LC 211 16

Key operated lock cases for wooden doors

4181 17
451S 17
428 17
2928 18

Automatic deadlocks for narrow stile doors

LC 300/4920 18
LC 301/4921 18
LC 302/4922 19
LC 303 19
LC 305/4925 19

Key operated deadlocks for narrow stile doors

LC 306/4956 20
LC 307 20

Locks for firearms cabinets and safes

2925 20
2926 21

Installation accessories

Transfer device 518 21
Security cover plates 21
Front plates 21
Striker plates 22
Cover front plates 26
Cover plates 26
Keys 26
Mortises 27

APPLICATIONS

When choosing a lock case for a particular purpose, you should pay attention to the demands for:
-burglary protection
-insurance company requirements
-fire resistance
-emergency exit safety
-operational safety
-durability
-mortise and fittings standards
-corrosion protection

The most common applications and the lock cases used:

WD = Wooden Door
NSD = Narrow Stile Door

Interior doors
Houses: 414, 2014, 2020, 4240, 4250
Public buildings/WD: 4250, 4290, LC 208
Public buildings/NSD: 4920

WC/bathrooms
Houses: 414, 2014, 4241, 4251
Public buildings: 4251, 4291, LC 200

Lockable interior doors
Houses: 2011, 2016, 2018, 4252, 4260, 4570, 9456
Public buildings/WD: 4190, 4252, LC 200
Public buildings/NSD: 4925

Exterior doors
Houses/WD: 4190, LC 200, LC 210, 451 S
Houses/NSD: 4922, 4925
Public buildings/WD: 4190, 4190 T, 4195, 4195 T, LC 200, LC 210
Public buildings/NSD: 4922, 4925,

Additional locking
Wooden doors: 428, LC 211
Balcony doors: 2928
Narrow stile doors: 4956, LC 307

Fire doors
Wooden doors: 4190T, 4197, LC206/4560, LC 203, LC 200, LC 202, LC 208, LC 210
Narrow stile: 4920, 4925
(When in doubt, please contact your national authorities)

Emergency exits
Wooden doors: 4193, LC 203
Narrow stile: 4921

FINISHES

ST/CR	Chrome plated steel.
ST/ZN	Zinc plated steel.
ST/EGL	Powder coated steel, brass colour.
ST/EGR	Powder coated steel, grey colour.
ST/WHITE	Powder coated steel, white colour.
ZNALCU/EGL	Powder coated zamac, brass colour.
ST/YECRLQ	Yellow chromated steel + varnish.
PA/BLACK	Black polyamide.
PA/WHITE	White polyamide.
Special finishes:	E.g. satin chrome plated, brass plated, special powder colours (all made only to order).

LOCKS WITH AUTOMATIC DEADLOCKING

Many ABLOY and BODA lock cases are equipped with an automatic deadlocking, controlled by a snib in the front plate.

In the automatic deadlocking mode, the bolt throw is increases from 14 mm to 20 mm.

In this mode it is not possible to retract the bolt other but using the cylinder or thumbturn and consequently a lock case with automatic deadlocking must always be fitted with a cylinder or thumbturn!

PREVENTING USE OF THE SNIB

The lock case for narrow stile doors, 4920, 4921, 4922 and 4925 are fitted with a patented feature to prevent unauthorized use of the snib.

The snib can only be moved when the key or thumbturn are turned.

HANDING

Please specify the handing when ordering a lock case.

A simple way to determine if the door (and lock) is left or right handed is to look at the door from the hinge side.

Left hand
(1 & 3)
The hinges are on the left side.

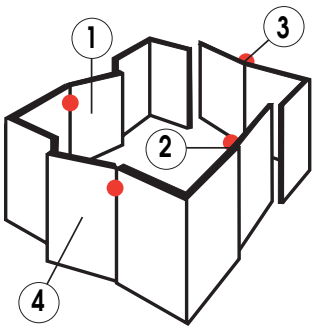

Right hand
(2 & 4)
The hinges are on the right side.

CYLINDERS

The cylinder to be used with a lock case is specified for each product.
We have used the following abbreviations:

	CYLINDER AND FITTINGS	KEY TYPES
ABLOY® FIN	Finnish range	ABLOY® CLASSIC/PROFILE/EXEC
ABLOY® D	Finnish range (DISKLOCK PRO)	ABLOY® DISKLOCK PRO
SCAND	Scandinavian range oval/round	ABLOY® DISKLOCK PRO, ASSA, TrioVing o.e.
Euro DIN	Europrofile DIN range	ABLOY® DISKLOCK PRO, ASSA, TrioVing o.e.

Please contact the importer or your local dealer for more detailed information.

DIMENSIONS & MORTISES

The dimensions given in this catalogue are normative. If you need dimensions with tolerances, please contact us:

telephone int.+358-2-424 402
telefax int. +358-2-424 249

MICROSWITCH LOCKS

Some lock cases can be equipped with a micro-switch. The product code has the ending "X".

The microswitch in the various lock cases changes its status as mentioned below:

4190X, 4193X, 4195X. The switch changes the status when the latchbolt leaves its "day" position, i.e. the bolt protrudes abt. 15 mm or more.

4181X. The switch changes the status when the deadbolt protrudes abt. 14 mm or more. **NB.** The key cannot be removed from the cylinder, unless the bolt has reached its end position (in or out).

4956X (35 mm back set). The switch changes the status when the hookbolt protrudes abt. 5 mm or more. In lock cases with other backset the protrusion is correspondingly bigger.

LC 210X and LC 211X. When closing the door, the switch changes the status when the cylinder follower starts to rotate. When opening the door, the switch changes its status only when the deadbolt is already completely withdrawn in the case.

4920-21-22-25X. The switch changes the status when the latchbolt protrudes abt. 9 mm or more.

428X. The switch changes the status during the last 1/3 turn of the key. **NB.** The key cannot be removed from the cylinder, unless the bolt has reached its end position (in or out).

451SX. The switch changes the status during the last 1/4 turn of the key. **NB.** The key cannot be removed from the cylinder, unless the bolt has reached its end position (in or out).

Drilling, installation and fitting of the microswitch lock cases are carried out in the same way as of the corresponding mechanical lock case.

Protective voltage must be used with the microswitch lock cases.
Maximum current 1A
Maximum voltage 60V DC, 40V AC
Maximum power 24 W

A deadlock with a microswitch can be used to switch on and off a burglar alarm system.
NB. The microswitch lock cases are not supplied with striker plates. If you want to use a microswitch bolt chamber with 4190X, 4193X or 4195X we recommend you to use striker plates 4692 or 4693.

BODA 414

Symmetrical latch. Lock handing is changed by turning the lock upp side down.

The latch can be fitted with either a lever handle or with a lever handle and toilet thumbturn/key.

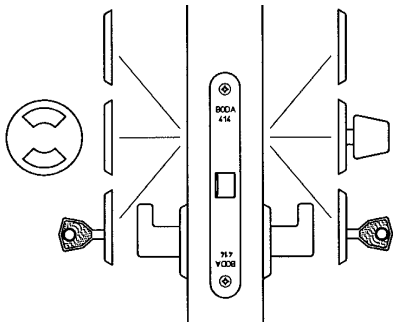

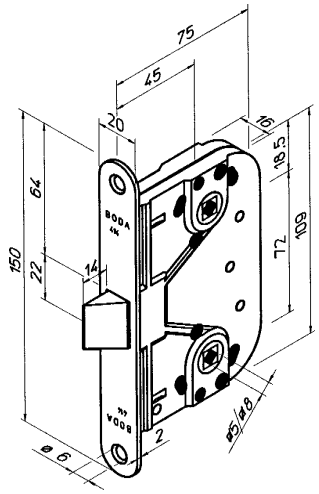

Striker plate	0045, 0068 Other striker plates also suitable, please see page 22.
Finish	ST/EGL, ST/ZN
Mortise standard	SFS 5210 SS 81 73 82

BODA 4249

Lock case for lightweight sliding and folding doors. The hookbolt can be locked either using a key or toilet thumbturn.

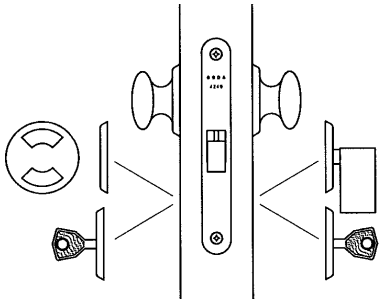

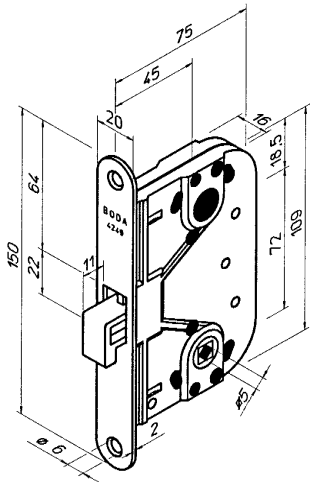

Striker plate	4662
Finish	ST/EGL
Mortise standard	SFS 5210

BODA 4238

Symmetrical roller latch. The latch bolt can be adjusted by means of the screw in the front plate. The door must have a handle.

For reasons of security, a special striker plate is used in conjunction with the roller latch.

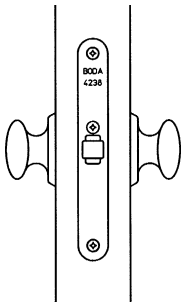

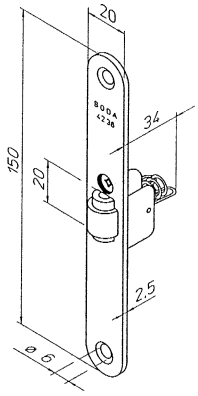

Striker plate	0046, 0078
Finish	ZNALCU/EGL
Mortise standard	SFS 5210 SS 81 73 82

BODA 2020

Lock for interior and toilet doors. It has one latch bolt which can be dead locked with either a key or toilet thumbturn.

Lock handing can easily be changed by pulling out the latchbolt and turning it 180°.

The lock can be used with a lever handle only or with both a lever handle and key or toilet thumbturn.

The lock fits into the same mortice as e.g. ASSA 404 and 404T.

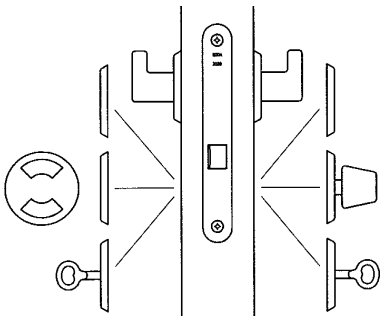

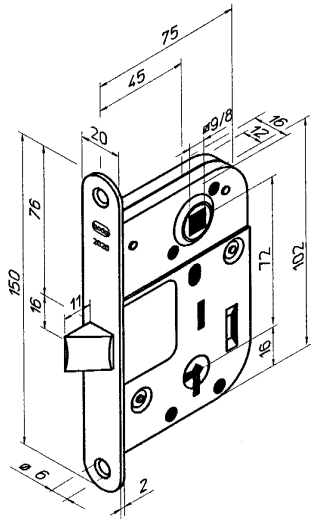

Striker plate	0045, 0068 Other striker plates also suitable, please see page 22.
Finish	ST/EGL

BODA 2014

Lock for interior and toilet doors. It can be locked with either a key or toilet thumbturn.

Lock handing can easily be changed by pulling out the latchbolt and turning it 180˚.

The lock can be fitted with either a lever handle or with a lever handle and toilet thumbturn/key.

The lock can also be equipped with DIN standard fittings. See page 29.

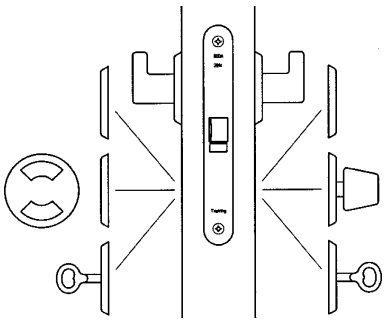

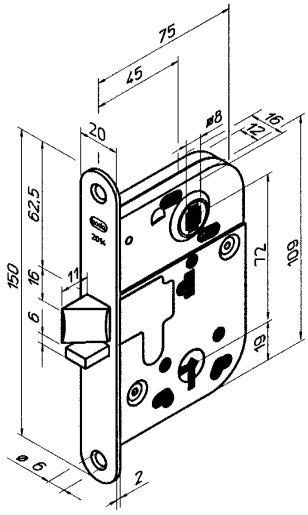

Striker plate	0045, 0068 Other striker plates also suitable, please see page 22.
Finish	ST/EGL, ST/ZN
Mortise standard	SFS 5210 SS 81 73 82

BODA 2011

Lever lock for interior doors. The lock features 5 levers to give 250 different key combinations.

Lock handing can easily be changed by pulling out the latchbolt and turning it 180˚.

The lock is fitted with lever handles and an escutcheon.

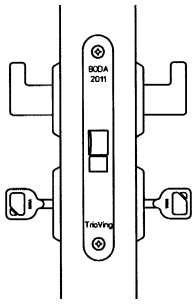

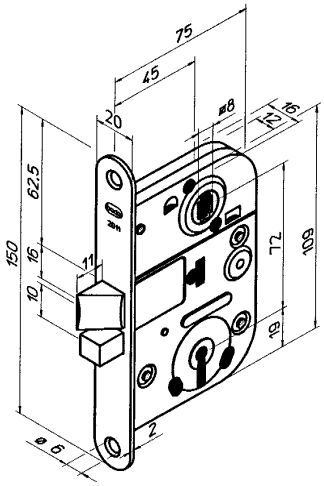

Striker plate	0045, 0068 Other striker plates also suitable, please see page 22.
Finish	ST/EGL, ST/ZN
Mortise standard	SFS 5210 SS 81 73 82

BODA 2016

Cylinder lock case for interior doors. It can be locked using a key or thumbturn. In locked position, the deadbolt protrudes 14 mm.

Lock handing can be changed by pulling out the latchbolt and turning it 180˚.

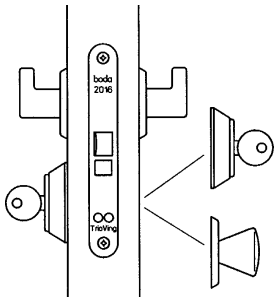

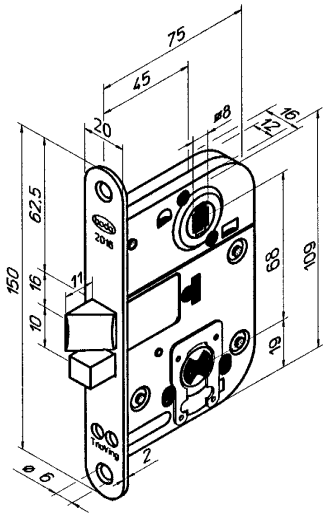

Striker plate	0045, 0068 Other striker plates also suitable, please see page 22.
Finish	ST/CR
Cylinder	SCAND
Mortise standard	SFS 5210 SS 81 73 82 See page 28

BODA 2018

Cylinder lock for interior doors. The lock can be opened and locked by turning the key one turn. In locked position, the deadbolt protrudes 14 mm.

Lock handing can easily be changed by pulling out the latchbolt and turning it 180°.

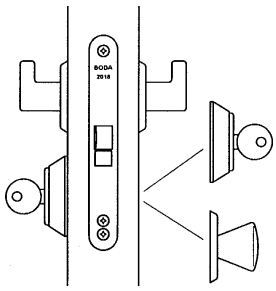

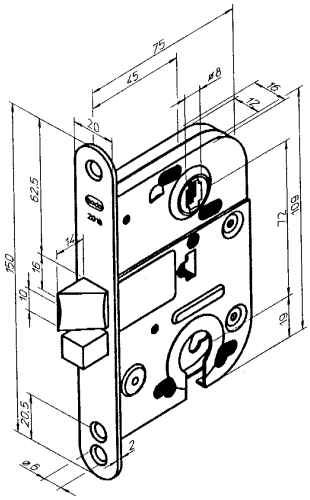

Striker plate	0045, 0068 Other striker plates also suitable, please see page 22.
Finish	ST/EGL, ST/CR
Cylinder	EuroDIN
Mortise standard	Special mortise. See page 3

ABLOY 4260

Cylinder mortise lock with automatic deadlocking latchbolt for interior doors. Deadlocking is controlled by the snib in the front plate.

Snib position:

UP = Deadlocking, latchbolt protrudes 20 mm. The lock can be opened only with a key or thumbturn.

DOWN = Latchbolt protrudes 14 mm. Lock can also be opened with lever handles.

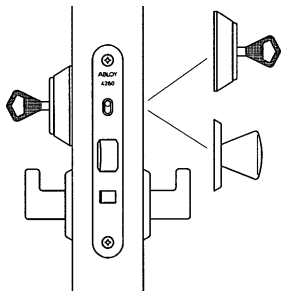

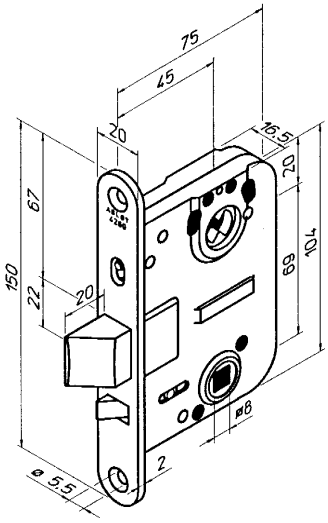

Striker plate	0045, 0068 Other striker plates also suitable, please see page 22.
Finish	ST/EGL, ST/ZN
Cylinder	ABLOY® FIN ABLOY® D
Mortise standard	SFS 5210 SS 81 73 82 See page 28

BODA 4570

Cylinder mortise lock with automatic deadlocking latchbolt for interior doors. Deadlocking is controlled by the snib in the front plate.

Snib position:

UP = Deadlocking, latchbolt protrudes 20 mm. The lock can be opened only with a key or thumbturn.

DOWN = Latchbolt protrudes 14 mm. The lock can also be opened with lever handles.

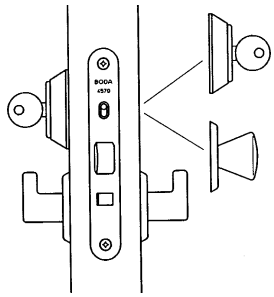

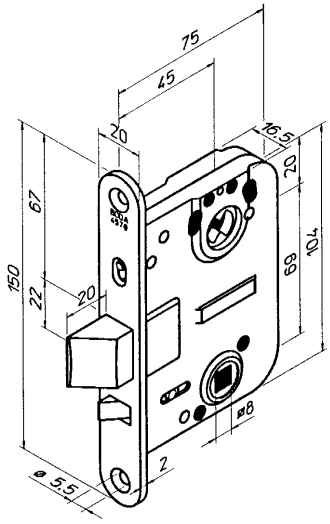

Striker plate	0045, 0068 Other striker plates also suitable, please see page 22.
Finish	ST/CR
Cylinder	SCAND
Mortise standard	SFS 5210 SS 81 73 82 See page 28

BODA 9456

Cylinder lock case for interior doors. A turn of the key or thumbturn throws the latchbolt 20 mm and deadlocks.

The lock is opened by turning the key or thumbturn anti-clockwise thereby allowing the latchbolt to protrude 14 mm for day mode. The door can then be opened using the lever handle.

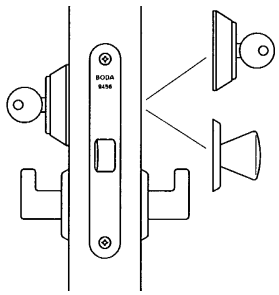

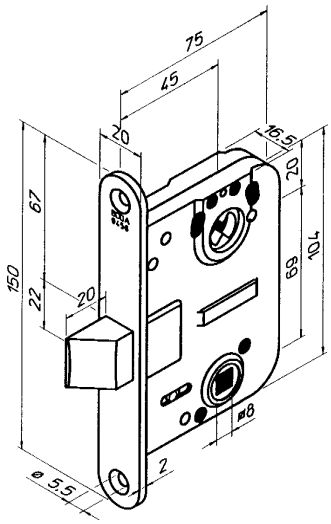

Striker plate	0045, 0068 Other striker plates also suitable, please see page 22.
Finish	ST/CR
Cylinder	SCAND
Mortise standard	SFS 5210 SS 81 73 82 See page 28

ABLOY 4290

Mortise lock with lever handle function. Recommended for public buildings.

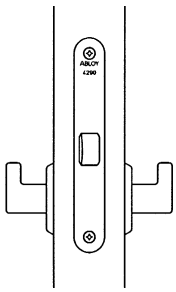

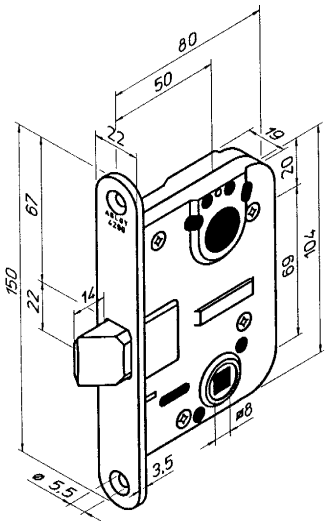

Striker plate	4690, 4691
Finish	ST/CR
Mortise standard	SFS 5209 See page 27

ABLOY 4291

Mortise lock for toilet doors in public buildings. The lock is suitable for use with lever handles and toilet thumbturn.

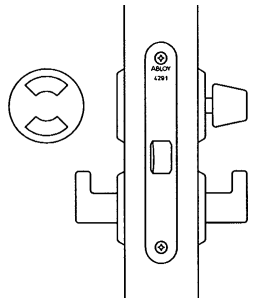

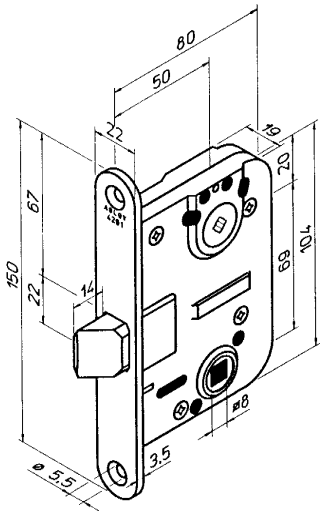

Striker plate	4690, 4691
Finish	ST/CR
Mortise standard	See page 28

BODA 4240

Lock for interior doors. Dimensions comply with the DIN 18251 standard.

The latch is controlled by lever handles and the deadbolt by the key. The deadbolt is protruding 10 mm.

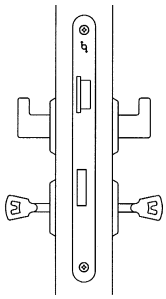

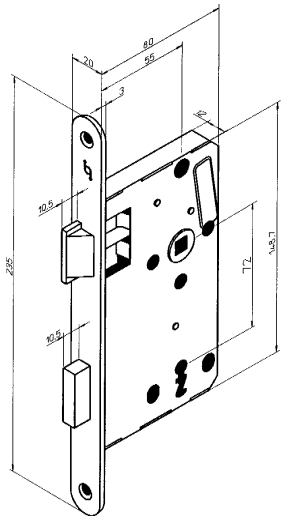

Striker plate	4669, 0029
Finish	ST/EGL ST/EGR
Mortise standard	See page 27

BODA 4241

Lock for toilet doors. Dimensions comply with the DIN 18251 standard.

The latch is controlled by lever handles and the deadbolt by the key. The deadbolt is protruding 10 mm.

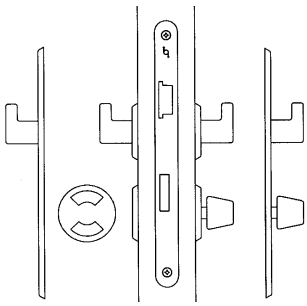

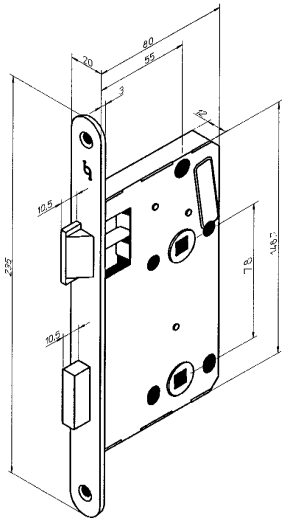

Striker plate	4669, 0029
Finish	ST/EGL ST/EGR
Mortise standard	See page 27

BODA 4242

Lock for DIN-Eurocylinder. Dimensions comply with the DIN 18251 standard.

The latch is controlled by lever handles and the deadbolt by a DIN-Eurocylinder. The deadbolt is protruding 20 mm.

The lock can be used with DIN escutcheons and long plates.

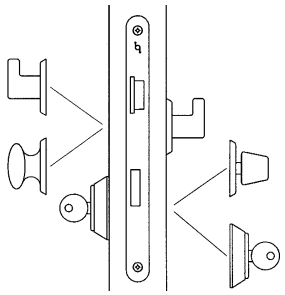

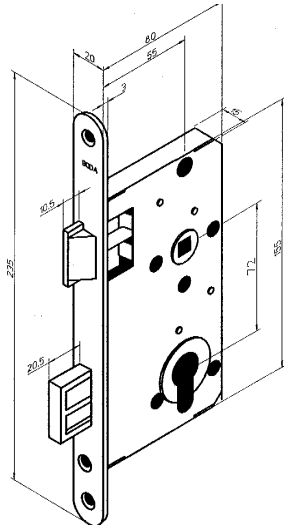

Striker plate	4669, 0029
Finish	ST/EGL ST/EGR
Cylinder	Euro DIN
Mortise standard	See page 27

BODA 4250

Symmetric lock for interior doors. The handing of the lock can easily be changed by turning the latch 180°.

The latch is controlled by lever handles and the deadbolt by the key. The deadbolt is protruding 10 mm.

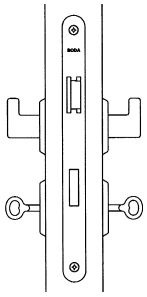

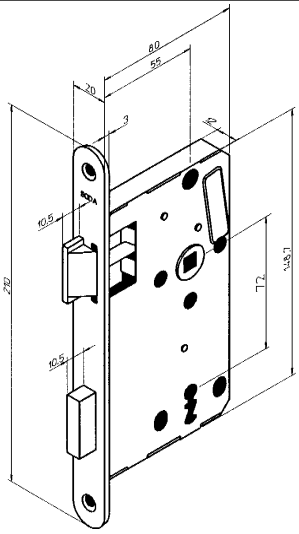

Striker plate	4669, 0029
Finish	ST/EGL ST/EGR
Mortise standard	See page 28

BODA 4251

Symmetric lock for toilet doors. The handing of the lock can easily be changed by turning the latch 180°.

The latch is controlled by lever handles and the dead-bolt by a toilet thumbturn (4 mm spindle). The deadbolt is protruding 10 mm.

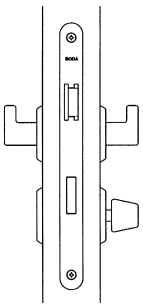

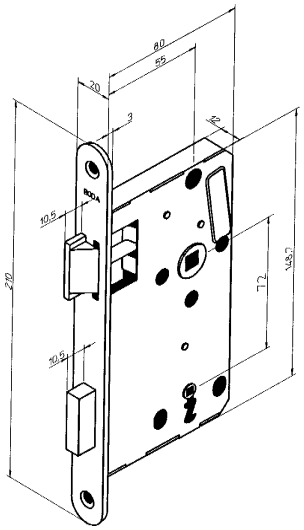

Striker plate	4669, 0029
Finish	ST/EGL ST/EGR
Mortise standard	SS 817383 See page 28

BODA 4252

Symmetric lock for interior doors. The handing of the lock can easily be changed by turning the latch 180°.

The latch is controlled by lever handles and the deadbolt by a DIN-Eurocylinder. The deadbolt is protruding 20 mm.

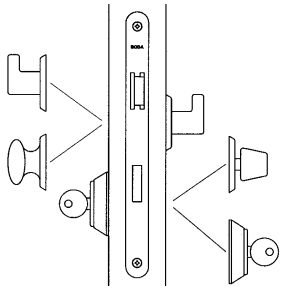

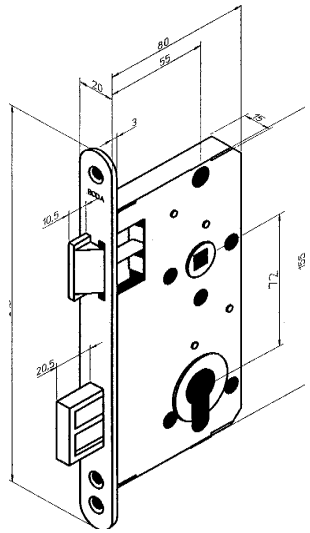

Striker plate	4669, 0029
Finish Cylinder	ST/EGL, ST/EGR Euro DIN
Mortise standard	See page 28

ABLOY LC 100

Lockcase with automatic deadlocking latchbolt. **The lock must always be equipped with handles, as the latchbolt is retracted with the handles only.**

The deadlocking is controlled by a small lever in the forend. When in "DEADLOCK" mode, the door is opened by turning the outside key 180° or the inside special thumbturn 90°. The handles are then activated, and the latchbolt can be retracted.

Lever position:
UP = Deadlocking, latchbolt protrudes 21 mm. The lever handles are activated by the key or the thumbturn.

DOWN = Latchbolt protrudes 14 mm. The door is opened with the lever handles.

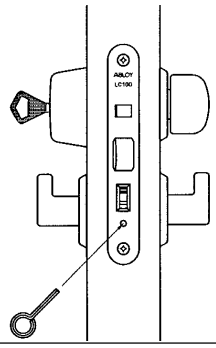

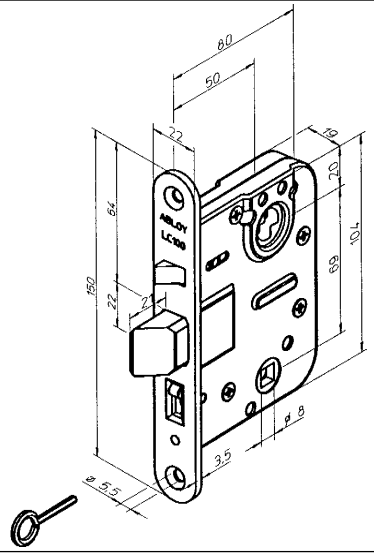

Striker plate	4690, 4691
Finish	ST/CR
Cylinder	ABLOY® FIN ABLOY® D
Mortise standard	SFS 5209 See page 27

ABLOY 4190

Cylinder lock case with automatic deadlocking latchbolt. The deadlocking is controlled by the snib in the front plate.

Snib position:

UP = Deadlocking, latchbolt protrudes 21 mm. The lock can be opened only with a key or thumbturn.

DOWN = Latchbolt protrudes 14 mm. The lock can also be opened with the lever handle.

Microswitch version
see page 3.

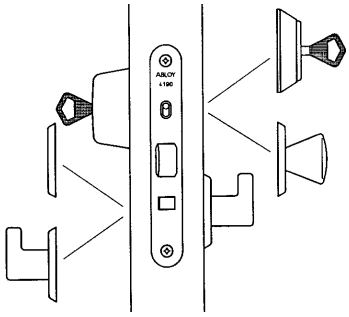

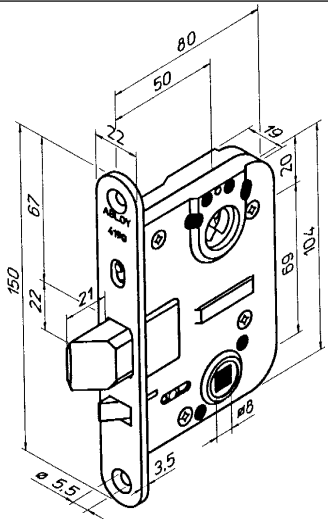

Striker plate	4690, 4691
Finish	ST/CR ST/YECRLQ
Cylinder	ABLOY® FIN ABLOY® D
Mortise standard	SFS 5209 See page 27

ABLOY 4190T

Cylinder lock case with automatic deadlocking latchbolt. Deadlocking function is controlled by the insertion of an Allen key in the front plate.

Deadlocking function:

TURN CLOCKWISE = Deadlocking, latchbolt protrudes 21 mm. The lock can be opened only with a key or thumbturn.

TURN ANTICLOCKWISE = Latchbolt protrudes 14 mm. The lock can also be opened with the lever handle.

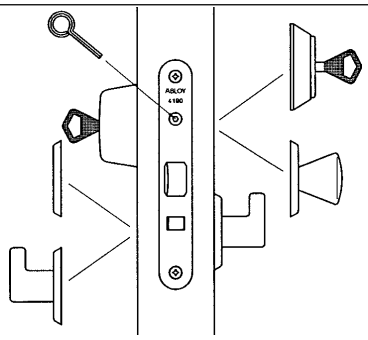

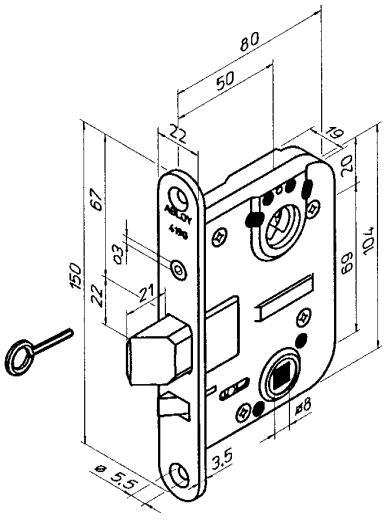

Striker plate	4690, 4691
Finish	ST/CR
Cylinder	ABLOY® FIN ABLOY® D
Mortise standard	SFS 5209 See page 27

ABLOY 4193

Cylinder lock case for emergency exits. The latchbolt deadlocks automatically when the door is closed protruding 21 mm.

The lock case is suited for use with a double cylinder and emergency thumbturn.

The bolt is opened with either the key or the emergency thumbturn.

Microswitch version
see page 3.

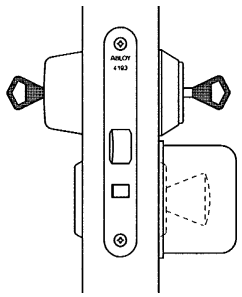

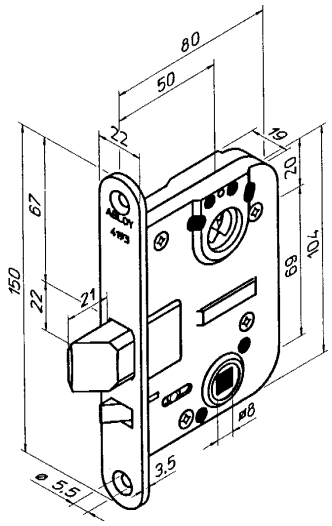

Striker plate	4690, 4691
Finish	ST/CR
Cylinder	ABLOY® FIN ABLOY® D
Mortise standard	SFS 5209 See page 27

ABLOY 4195

Cylinder lock case with automatic deadlocking latchbolt. The latchbolt can be held within the lock case and deadlocking is controlled by the snib in the front plate.

Snib position:

UP = Deadlocking, latchbolt protrudes 21 mm. The lock can be opened only with key or thumbturn.

DOWN = Latchbolt is locked in the lock case. The door is kept closed using the door closer.

Microswitch version
see page 3.

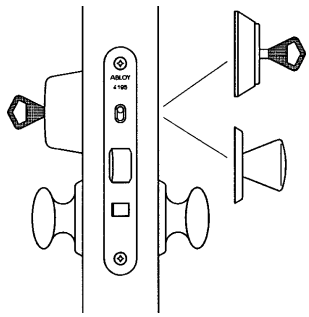

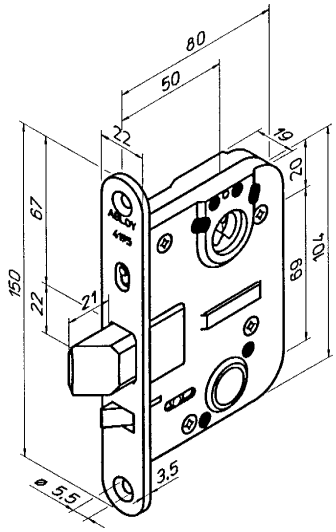

Striker plate	4690, 4691
Finish	ST/CR ST/YECRLQ
Cylinder	ABLOY® FIN ABLOY® D
Mortise standard	SFS 5209 See page 27

ABLOY 4195T

Cylinder lock case with automatic deadlocking latchbolt. The latchbolt can be held within the lock case and deadlocking is controlled by the insertion of an Allen key in the front plate. The lock has no lever handle function.

Deadlocking function:

TURN CLOCKWISE = Deadlocking, latchbolt protrudes 21 mm. The lock can be opened only with a key or thumbturn.

TURN ANTICLOCKWISE = Latchbolt is locked in the lock case. The door is kept closed using the door closer.

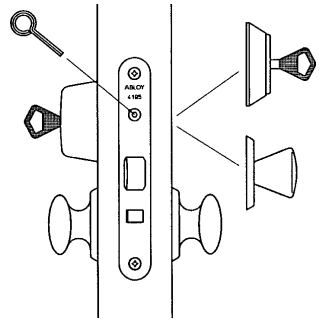

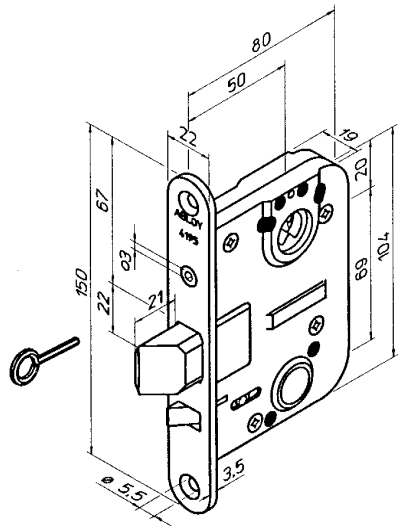

Striker plate	4690, 4691
Finish	ST/CR
Cylinder	ABLOY® FIN ABLOY® D
Mortise standard	SFS 5209 See page 27

ABLOY 4197

Cylinder lock case with cylinder function for fire doors.

The lock is opened by key or thumbturn.

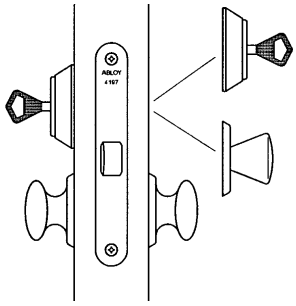

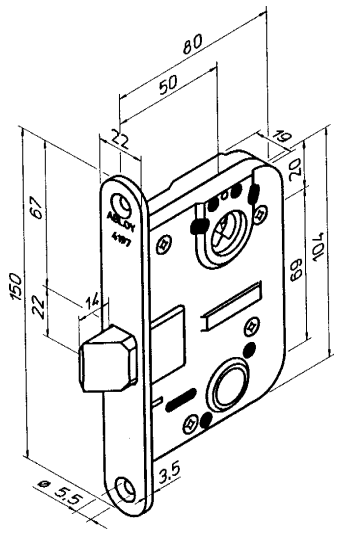

Striker plate	4690, 4691
Finish	ST/CR
Cylinder	ABLOY® FIN ABLOY® D
Mortise standard	SFS 5209 See page 27

ABLOY 4960

Cylinder lock case for folding and sliding doors. Deadlocking is controlled by a snib in the front plate.

Snib position:

UP = Locks automatically when the door closes. Use key or thumbturn to open.

DOWN = Hookbolt is locked in the lock case.

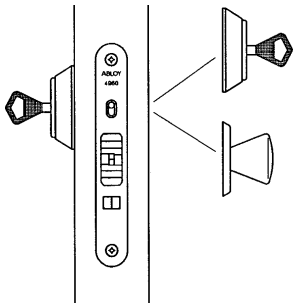

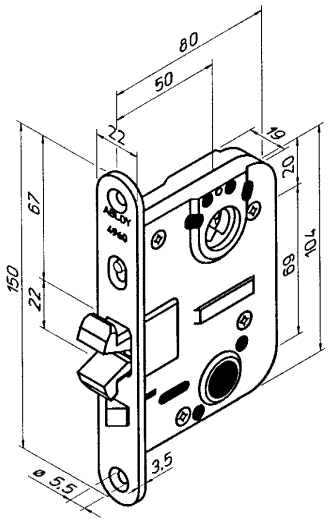

Striker plate	4662
Finish	ST/CR
Cylinder	ABLOY® FIN ABLOY® D
Mortise standard	SFS 5209 See page 27

ABLOY LC 206/BODA 4560

Cylinder lock case with two latchbolts. The upper latchbolt automatically deadlocks when the door is closed and can be locked in the lock case using the holding latchback facility located in the front plate.
The latchback can be locked in an up or down position to prevent unauthorised usage.

The latchbolt is opened by turning the key or thumbturn 90˚. The lower latchbolt can also be opened by the lever handle.

LC206/4560X is the microswitch version.

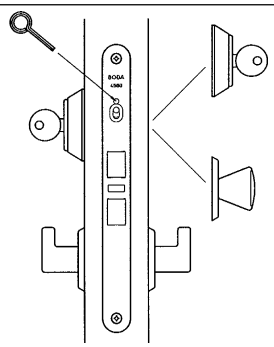

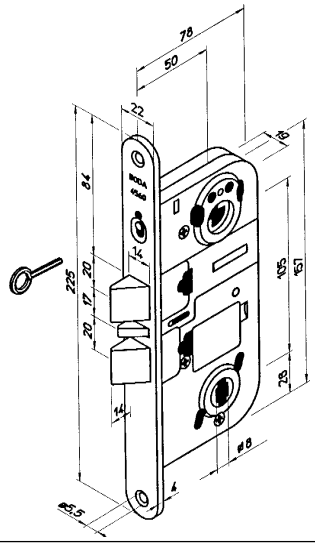

Striker plate	0034
Finish	ST/CR
Cylinder	SCAND
Mortise standard	SS 81 73 83 See page 27

ABLOY LC 200 / BODA 4565

Lockcase with deadbolt and latchbolt. 20 mm bolt throw. The deadbolt is locked and retracted by turning the key or thumbturn 90°. A further 5° turn will retract the latchbolt as well.

The latchbolt is retracted also by the lever handle.

The lock can be equipped with a microwitch.

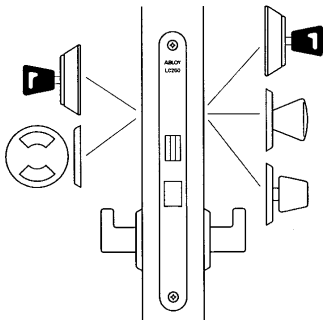

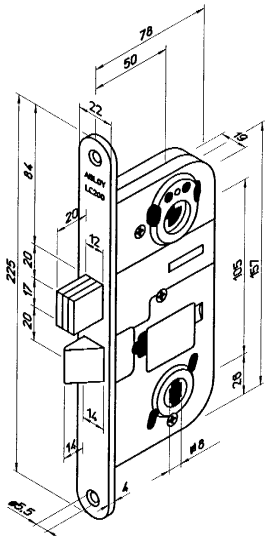

Striker plate	0034
Finish	ST/CR
Cylinder	
ABLOY LC 200	ABLOY® D
BODA 4565	SCAND
Mortise standard	SS 81 73 83 See page 27

ABLOY LC 202

Lockcase with automatic deadlocking latchbolt and heavy duty springing.

Latchbolt is retracted from the outside by turning the key 90°, or from the inside with the lever handle.

The lock can be equipped with a microwitch.

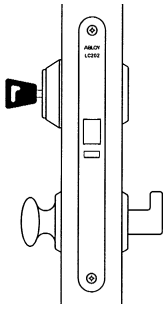

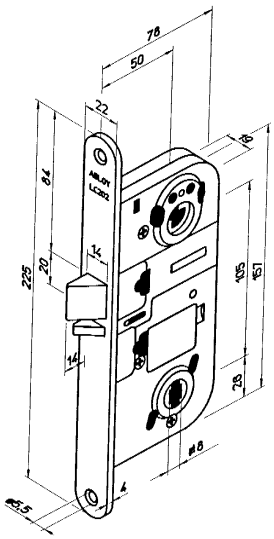

Striker plate	0034
Finish	ST/CR
Cylinder	ABLOY® D
Mortise standard	SS 81 73 83 See page 27

ABLOY LC 203

Lockcase with automatic deadlocking latchbolt for emergency exits.

Latchbolt is retracted from the outside by turning the key 90°, or from the inside by the key or the emergency exit thumbturn.

The lock can be equipped with a microwitch.

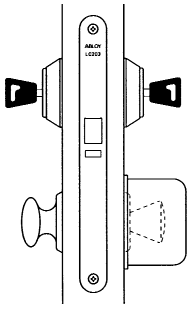

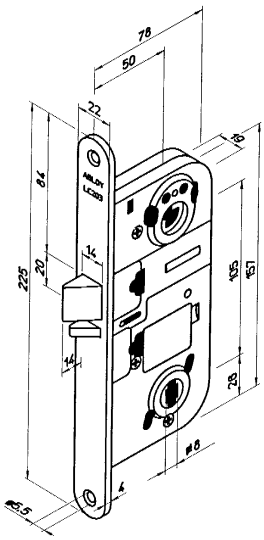

Striker plate	0034
Finish	ST/CR
Cylinder	ABLOY® D
Mortise standard	SS 81 73 83 See page 27

ABLOY LC 204 / ABLOY 4180

Lockcase with automatic deadlocking latchbolt. For latching function bolt is retained by depressing it into the lockcase and sliding the button on forend down.

Function is determined by sliding button on forend:

UP-position = automatic deadlocking. Operates by key (or thumbturn) from either side.

DOWN-position = lock is latched and operates also with handles.

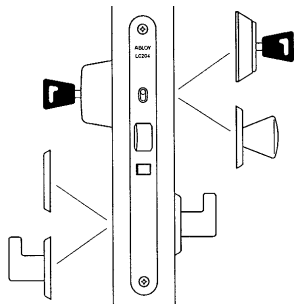

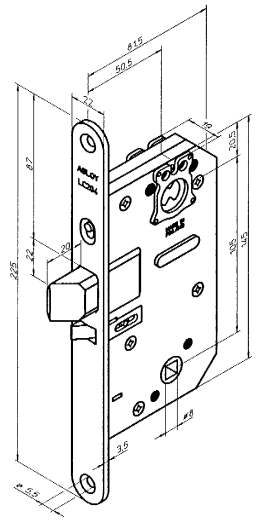

Striker plate	4690, 4691
Finish	ST/CR
Cylinder	ABLOY® FIN ABLOY® D
Mortise standard	SS 81 73 83 See page 27

ABLOY LC 205

Lockcase with automatic deadlocking latchbolt. The latchbolt can be held in the lockcase by sliding down the button in the forend. The button can be blocked in up or down position with a special key to prevent unauthorized usage.

Latchbolt is retracted from either side by turning the key or thumbturn 90°.

The lock has no lever function. The door should be equipped with a door closer and pulling handle.

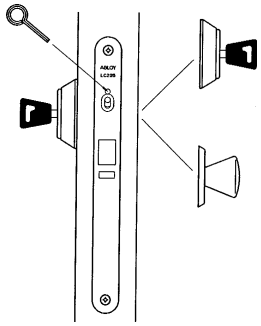

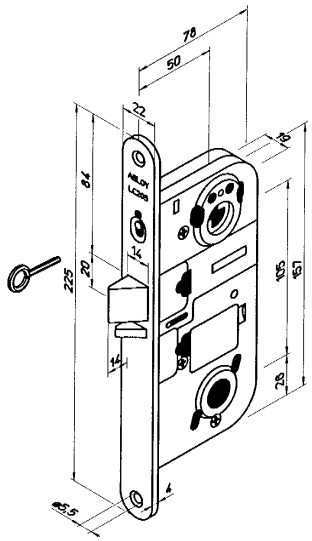

Striker plate	0034
Finish	ST/CR
Cylinder	ABLOY® D
Mortise standard	SS 81 73 83 See page 27

ABLOY LC 208 / BODA 4598

Mortise latch with lever handle function only.

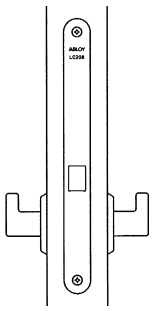

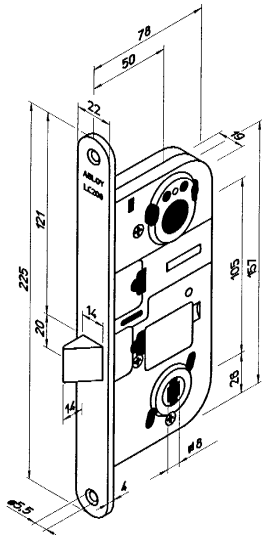

Striker plate	0034
Finish	ST/CR
Mortise standard	SS 81 73 83 See page 27

ABLOY LC 210

Security mortice lockcase with latchbolt and hardened deadbolt. The deadbolt has 20 mm bolt throw. The deadbolt is locked and retracted by turning the key or thumbturn 360°. The latchbolt is retracted by the lever handle only.

Microswitch version
see page 3.

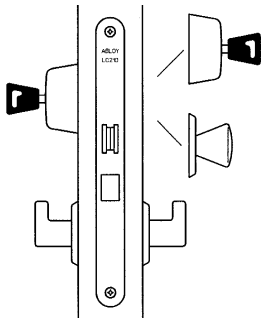

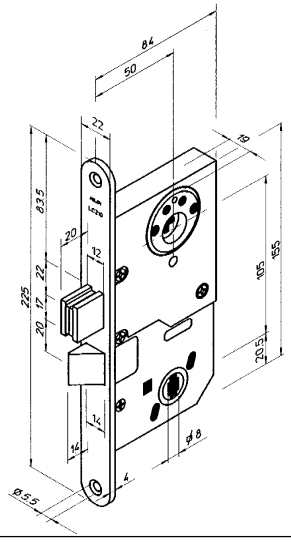

Striker plate	004014, 0079
Finish	ST/CR ST/YECRLQ
Cylinder	ABLOY® D
Mortise standard	SS 81 73 83 See page 27

BODA 4865

Security mortise lock with hardened bolt.

The deadbolt has a 20 mm bolt throw. The bolt is deadlocked by turning the key and is retracted with the lever handle.

Microswitch version
see page 3.

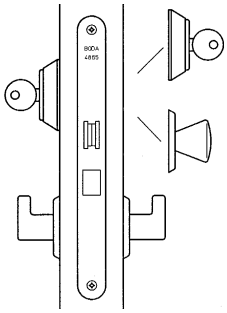

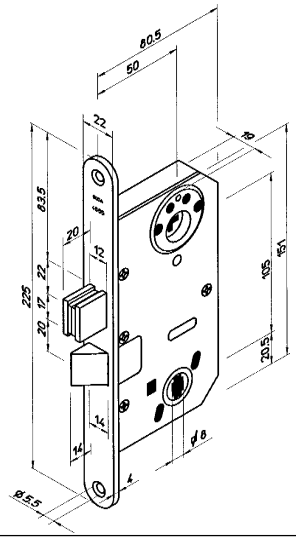

Striker plate	004014, 0079
Finish	ST/CR ST/YECRLQ
Cylinder	SCAND
Mortise standard	SS 81 73 83 See page 27

ABLOY LC 211

Security mortice lockcase with hardened deadbolt. The deadbolt has 20 mm bolt throw. The deadbolt is locked and retracted by turning the key or thumbturn 360°.

Microswitch version
see page 3.

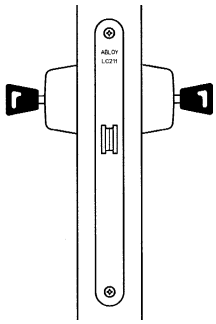

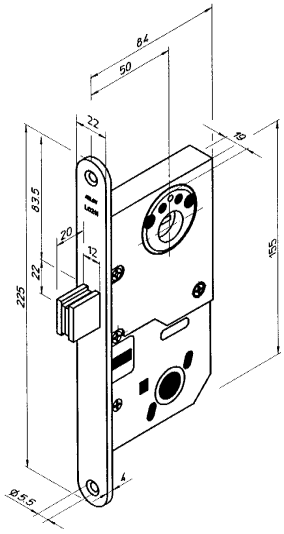

Striker plate	4690, 4691
Finish	ST/CR ST/YECRLQ
Cylinder	ABLOY® D
Mortise standard	SS 81 73 83 See page 27

ABLOY 4181

Security deadlock.

Microswitch version
see page 3.

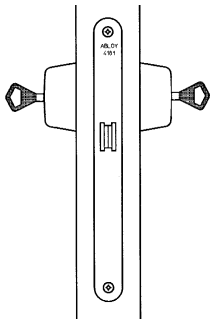

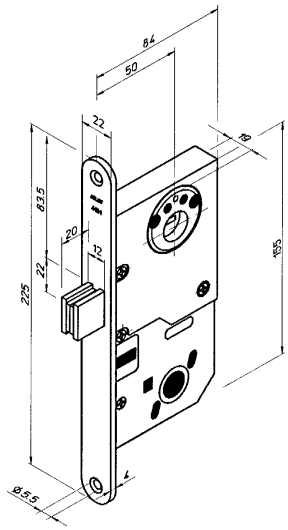

Striker plate	4690, 4691
Finish	ST/CR
Cylinder	ABLOY® FIN
Mortise standard	SS 81 73 83 See page 27

BODA 451 S

This lock features two deadbolts. One is controlled by a double cylinder or cylinder and thumb-turn combination.The other has 8 levers and gives 100,000 different key combinations,

The upper cylinder deadbolt protrudes 20 mm with the key retractable in both open and closed positions.

The lower lever deadbolt also has a 20 mm bolt throw. The key can only be withdrawn when the dead-bolt is fully locked or retracted.

Centre latch enables opening and closing of door using lever handles.

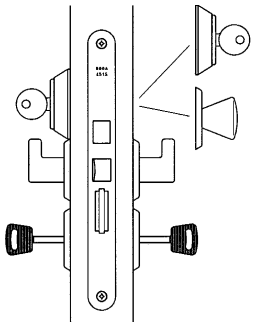

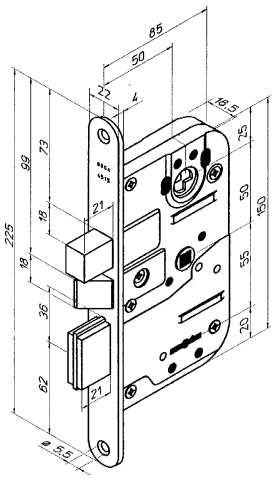

Striker plate	004014, 0079
Finish	ST/CR ST/EGL
Cylinder	ABLOY® D SCAND
Mortise standard	SS 81 73 83 See page 27

BODA 428

Security lock.

The lock features 8 levers to give over 100,000 different key combinations.

The key can only be with-drawn when the deadbolt is fully locked or retracted. The deadbolt protrudes 20 mm.

Microswitch version
see page 3.

Can be keyed alike with BODA 2928 lock.

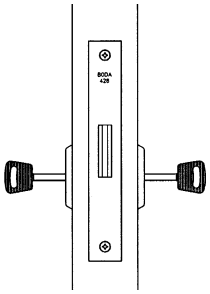

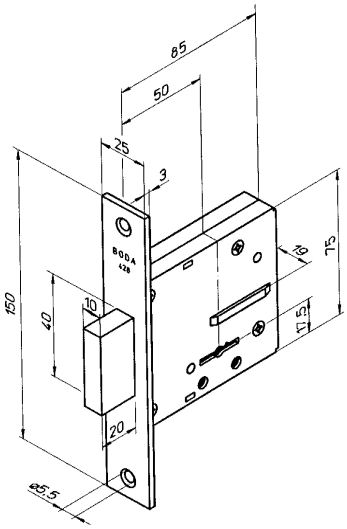

Striker plate	0036, 0065
Finish	ST/CR
Mortise standard	See page 28

BODA 2928

Security lock for homes. The lock features 8 levers to give over 100,000 key combinations.

The lock is surface mounted and particularly suited for doors unable to accept a standard mortise lock.

The key can only be withdrawn when the deadbolt is fully locked or retracted. The deadbolt protrudes 20 mm.

Can be keyed alike with BODA 428 lock.

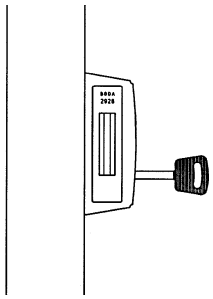

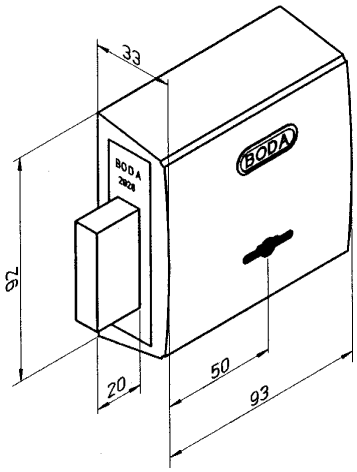

Striker plate	0036
Finish	PA/BLACK PA/WHITE
Mortise standard	Surface mounting

ABLOY LC 300 / ABLOY 4920

Non-deadlocking mortice lock for narrow stile entrance doors.

The lock is opened by key or thumbturn (or handles if in use). Can be used with electric striker plate.

The sliding button is locked in the MID-position.

Microswitch version, see page 3.

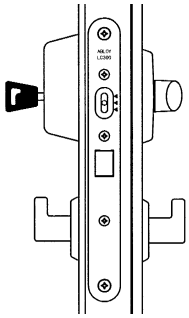

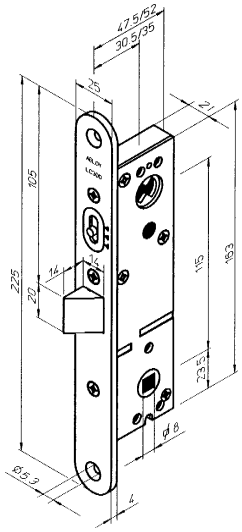

Striker plate	4613, 4614
Finish	ST/CR
Cylinder	ABLOY® FIN ABLOY® D SCAND
Mortise standard	See page 29

ABLOY LC 301 / ABLOY 4921

Automatic mortice deadlock for narrow stile emergency exit doors.

The lock can be opened either with a key (outside and inside) or by using the emergency thumbturn (sliding button in UP position).

Bolt can be retained inside lockcase (sliding button in DOWN position).

Sliding button is released only when turning the key.

Microswitch version, see page 3

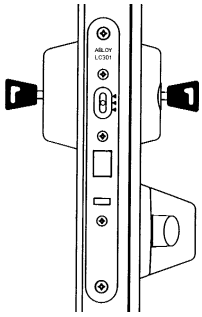

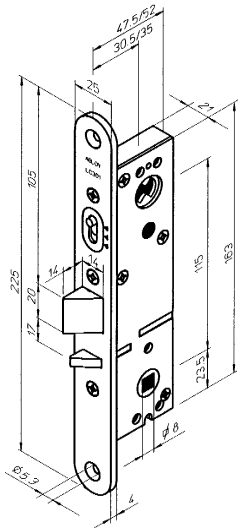

Striker plate	4613, 4614
Finish	ST/CR
Cylinder	ABLOY® FIN ABLOY® D SCAND
Mortise standard	See page 29

ABLOY LC 302 / ABLOY 4922

Automatic mortice deadlock for narrow stile doors. Primarily for doors of business or commercial premises. Function is determined by sliding button on forend:

UP-position = automatic deadlocking. Opened by key from either side, or by thumbturn from inside.

MID-position = lock is latched and operates also with handles.

DOWN-positon = bolt is retained inside lockcase.

Sliding button is released only when turning the key (or thumb-turn).

Microswitch version, see page 3.

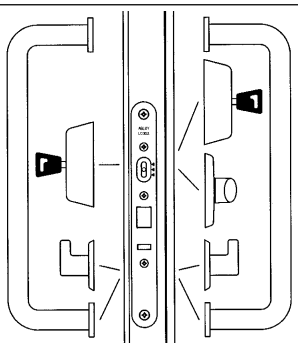

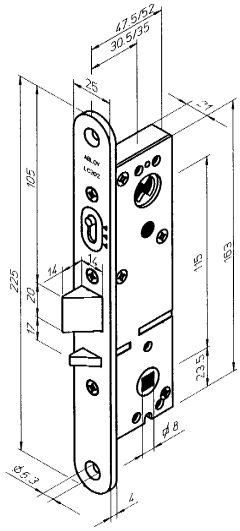

Striker plate	4613, 4614
Finish	ST/CR
Cylinder	ABLOY® FIN ABLOY® D SCAND
Mortise standard	See page 29

ABLOY LC 303

Mortice latch for narrow stile doors with lever function only.

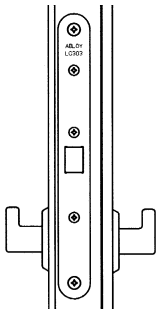

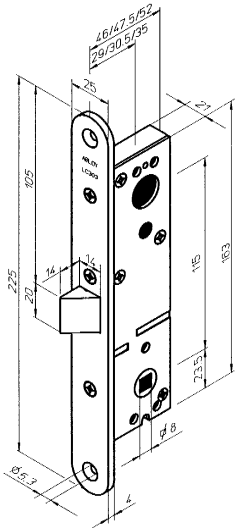

Striker plate	4613, 4614
Finish	ST/CR
Mortise standard	See page 29

ABLOY LC 305 / ABLOY 4925

Automatic mortice deadlock for narrow stile doors. Primarily for doors which must always be latched (e.g. fire doors) and where deadlocking is needed. Function is determined by sliding button on forend:

UP-position = automatic deadlocking. Operates by key (or thumbturn) from either side.

MID-position = lock is latched and operates also with handles.

DOWN-positon = not in use.

Sliding button is released only when turning the key (or thumb-turn).

Microswitch version, see page 3.

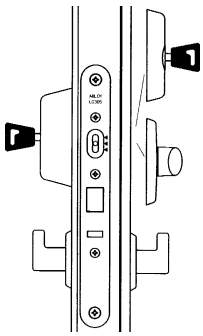

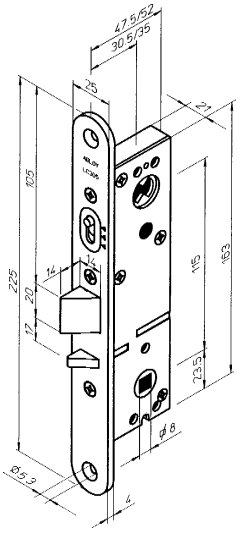

Striker plate	4613, 4614
Finish	ST/CR
Cylinder	ABLOY® FIN ABLOY® D SCAND
Mortise standard	See page 29

ABLOY LC 306 / ABLOY 4956

Mortice deadlock for narrow stile doors with key operated hook deadbolt. Operates with key from either side with double cylinder, or from one side only with single cylinder.

Key is removable only in both locked and unlocked position.

Microswitch version, see page 3.

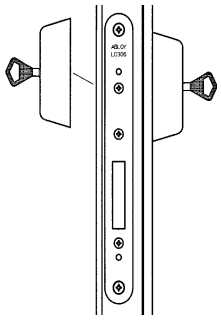

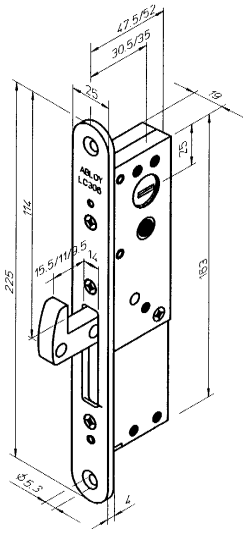

Striker plate	4655
Finish	ST/CR
Cylinder	ABLOY® FIN
Mortise standard	See page 29

ABLOY LC 307

Mortice deadlock for narrow stile doors with key operated hook deadbolt. Operates with key from either side with double cylinder, or from one side only with single cylinder.

Key is removable only in both locked and unlocked position.

Microswitch version, see page 3.

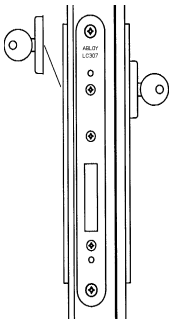

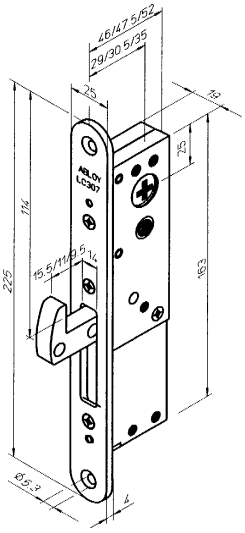

Striker plate	4655
Finish	ST/CR
Cylinder	ABLOY® D SCAND
Mortise standard	See page 29

BODA 2925

Lock case approved by the Swedish Standards Association (SIS) under standards SS 3492 and SS 3493 for gun cabinets and safes.

The lock features 8 levers to give over 500,000 different key combinations.

The key can only be with-drawn when the deadbolt is fully locked.
The deadbolt protrudes 20 mm.

BODA 2925 is fixed through the case.

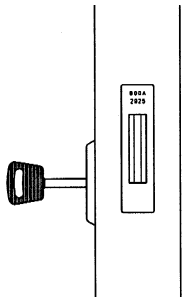

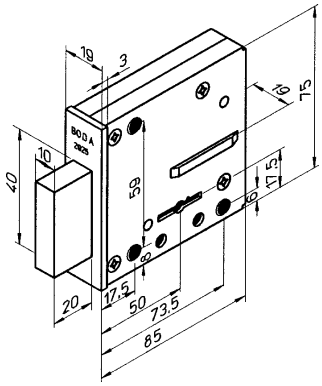

Striker plate	–
Finish	ST/ZN
Mortise standard	–

BODA 2926

Lock case approved by the Swedish Standards Association (SIS) under standards SS 3492 and SS 3493 for gun cabinets and safes.

The lock features 8 levers to give over 500,000 different key combinations.

The key can only be with-drawn when the deadbolt is fully locked.
The deadbolt protrudes 20 mm.

BODA 2926 is fixed through the forend.

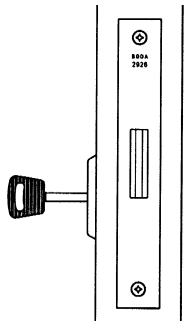

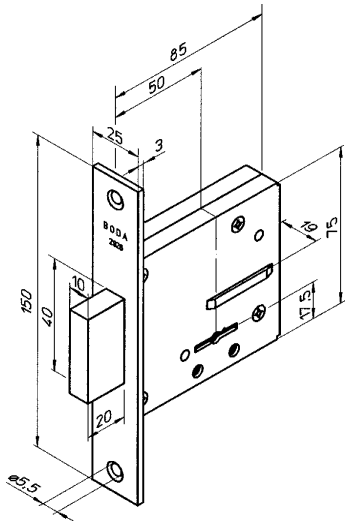

Striker plate	–
Finish	ST/ZN
Mortise standard	–

TRANSFER DEVICE 518

The BODA 518 transfer device can be used to combine two different locking systems.

The device is suitable for locking electricity control rooms or similar premises.

The device can be used to combine ABLOY® FIN and ABLOY® D with SCAND cylinders.

Finish: CR

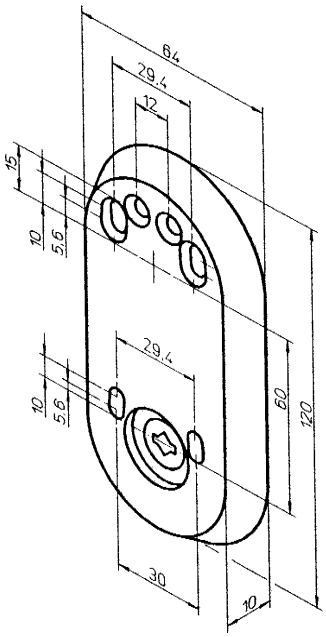

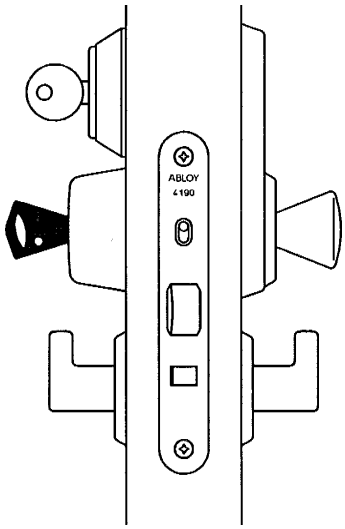

NB. Fittings to be ordered separately.

SECURITY COVER PLATES BODA 7677

For BODA 428. These plates protect the lock case and reinforce the door against break-ins.

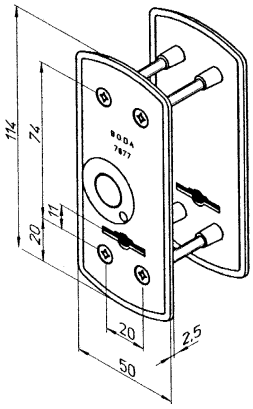

SECURITY COVER PLATES BODA 113

These plates are suitable for use with BODA 428 or BODA 451 S security locks.

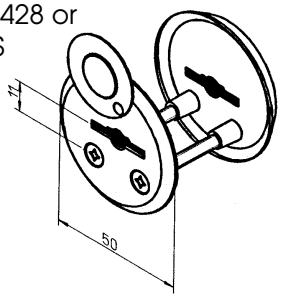

FRONT PLATES

The front plates cover the tooling marks left by the miller when making the mortise.

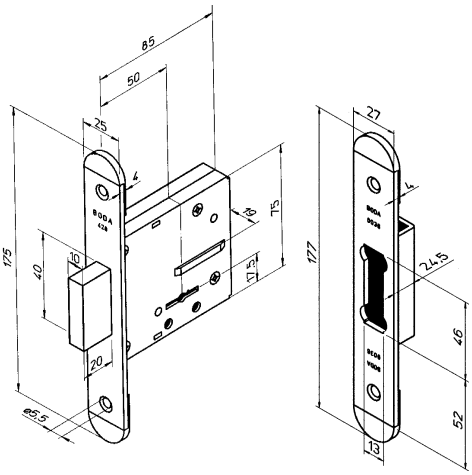

401664 = for lock case 428
Finish: ABS/CR

401666 = for striker plate 0036

STRIKER PLATES FOR INTERIOR DOORS

0028	0029	0045	0049
35 mm flush doors	40 mm flush doors	40 mm flush doors	44 mm flush doors
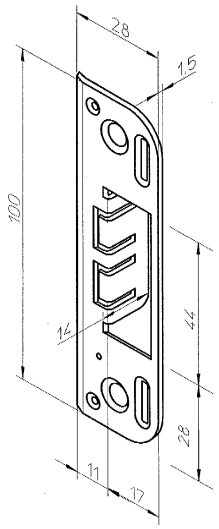	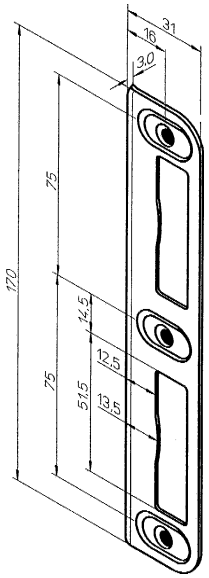	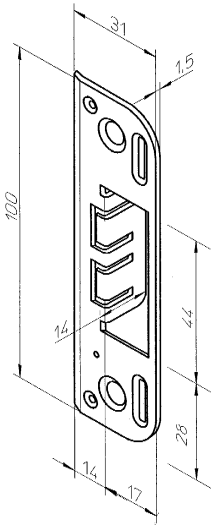	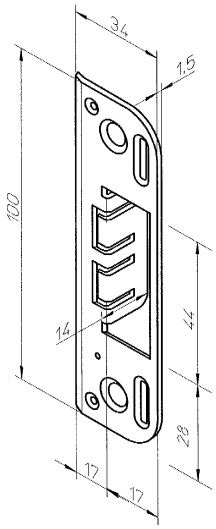

4670	0068	0046	0078
44 mm flush doors, when edge of striker plate comes over door edge	rebated doors	flush doors with a BODA 4238 roller latch	rebated doors with a BODA 4238 roller latch
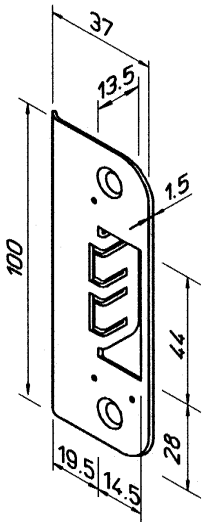	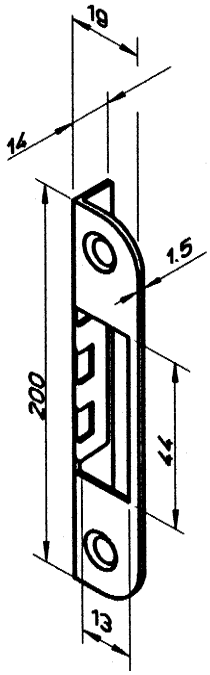	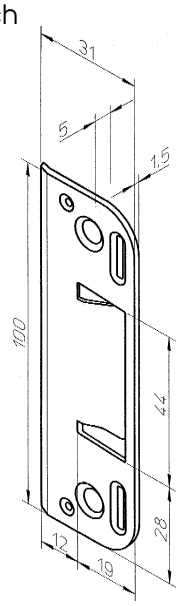	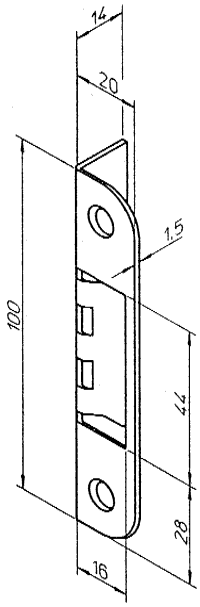

STRIKER PLATES FOR WOODEN DOORS

4662	4690	4691	4692
is used with a BODA 4249 hookbolt lock	flush doors	rebated doors	flush doors

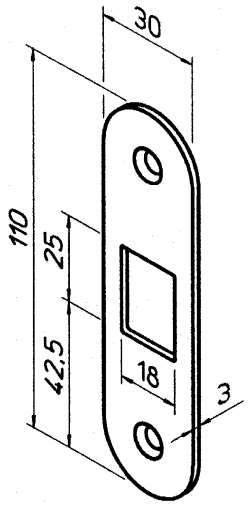

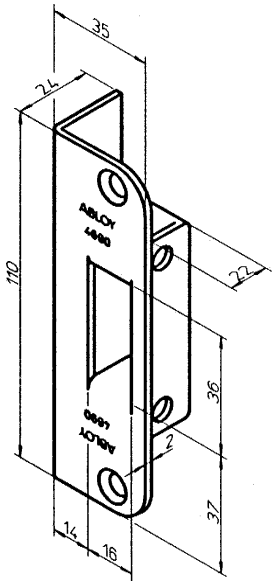

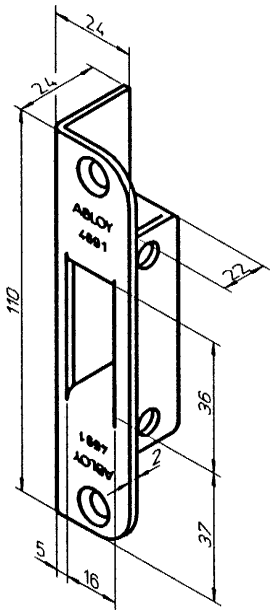

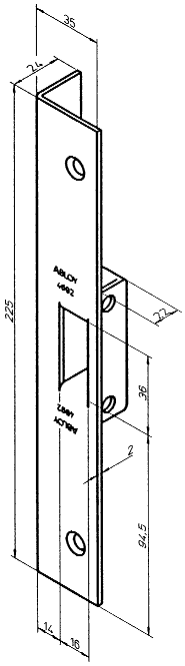

4693	0034	003136	003140
rebated doors	flush doors	flush doors	flush doors

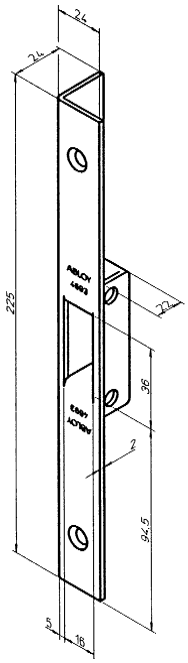

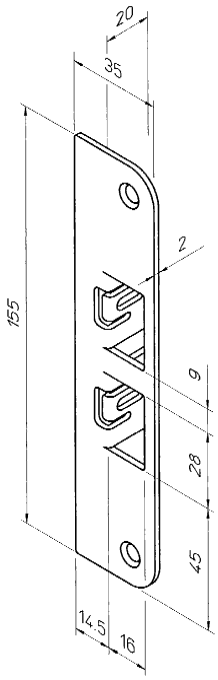

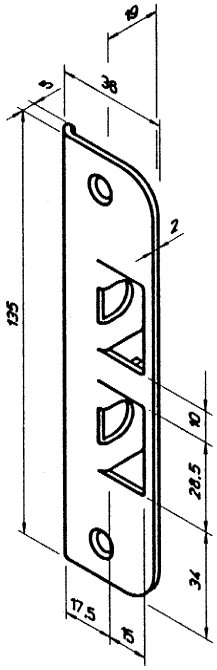

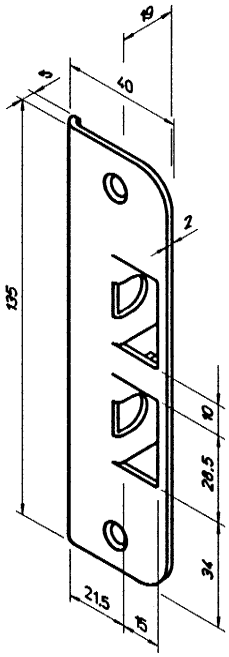

STRIKER PLATES FOR WOODEN DOORS

4667	004012	004014	004020
rebated doors MDF-frame	flush doors	flush doors	flush doors
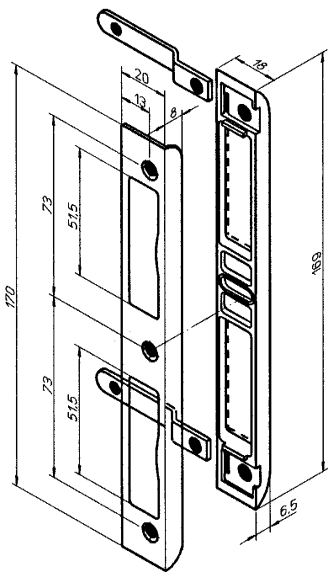	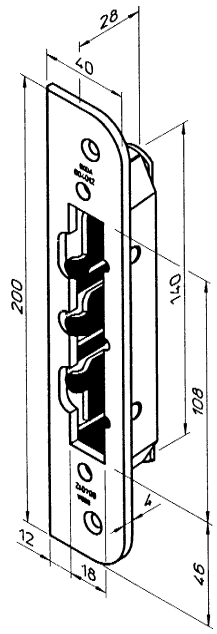	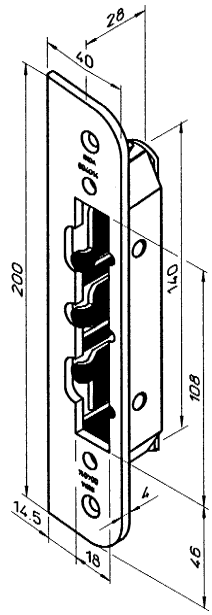	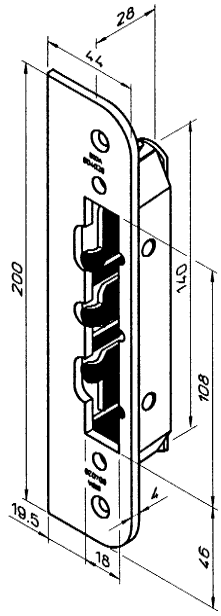

0079	4669	0036	0065
rebated doors	rebated doors wooden frame	flush doors	rebated doors
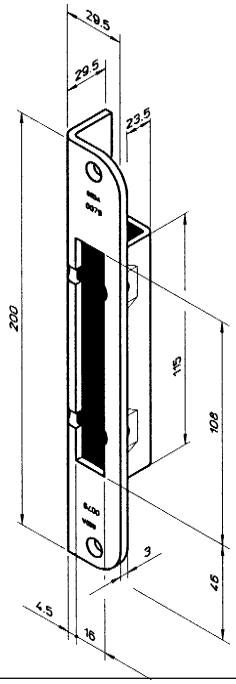	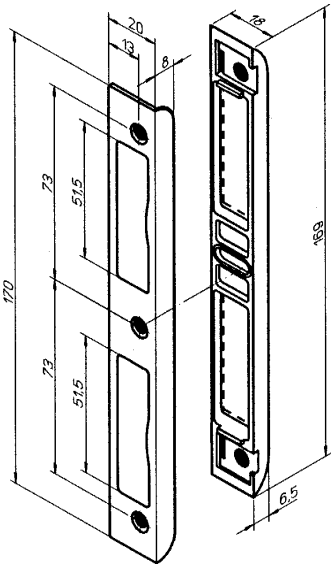	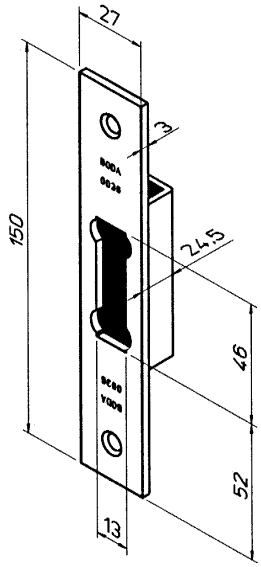	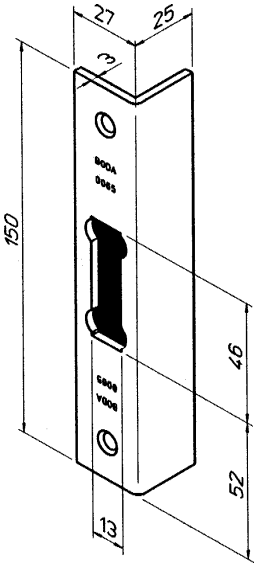

STRIKER PLATES FOR NARROW STILE DOORS

4666	4613	4614	4655
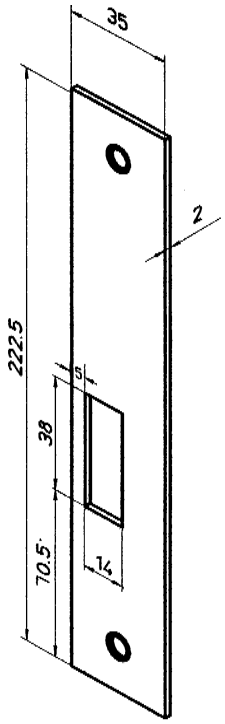	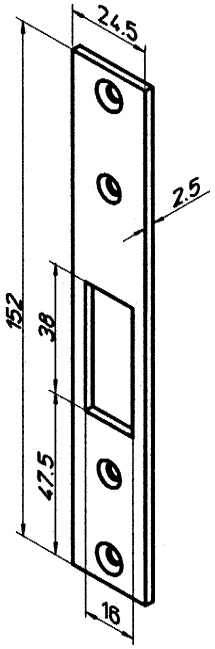	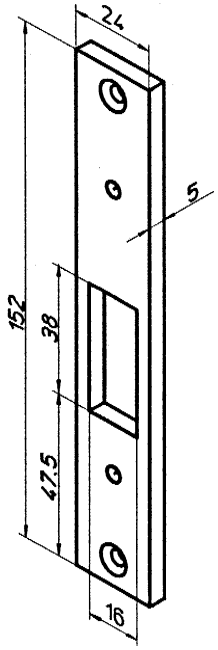	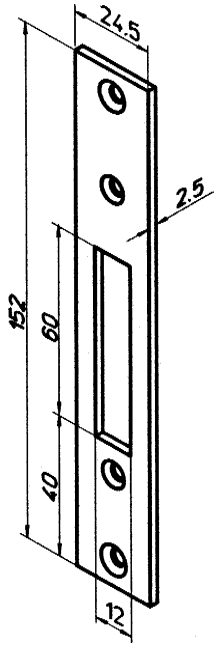

LP 700	LP 701
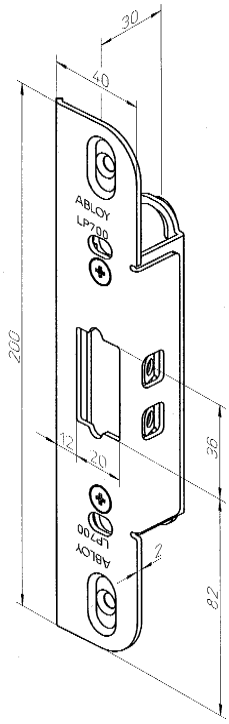	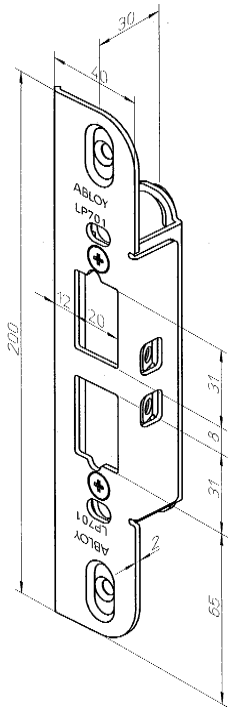

COVER FRONT PLATES

7690

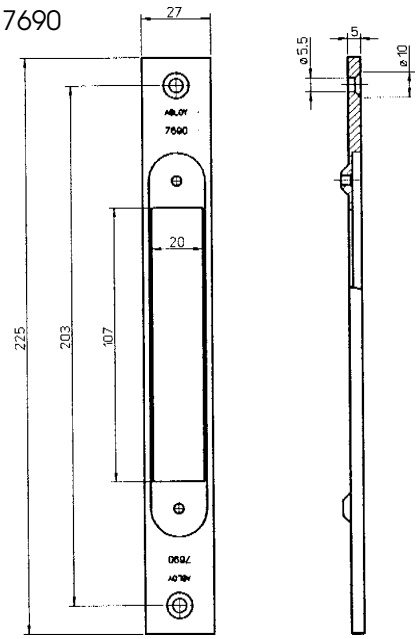

7691

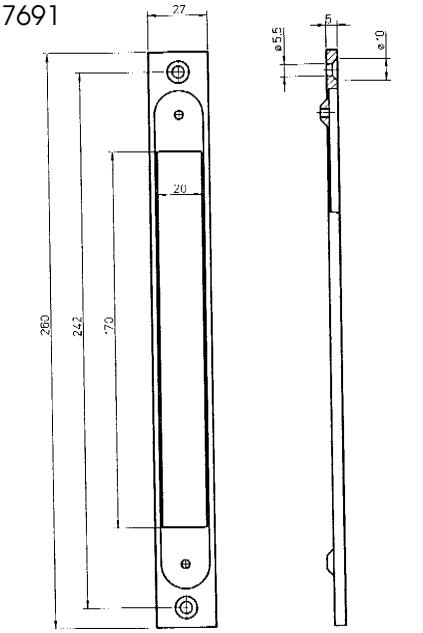

7694

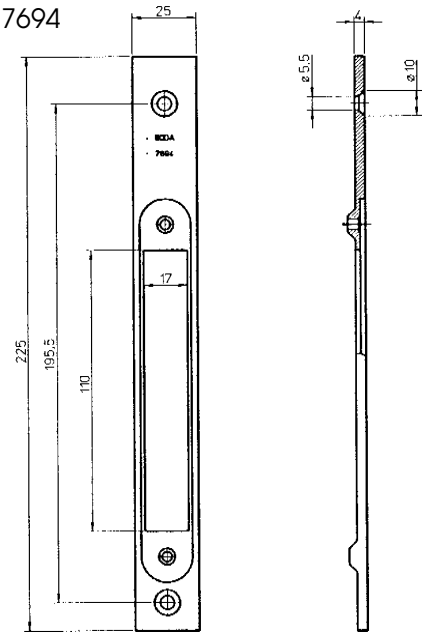

COVER PLATES

023

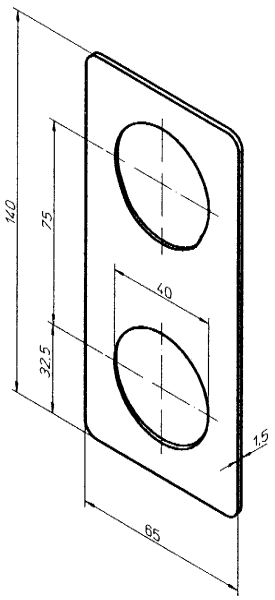

024

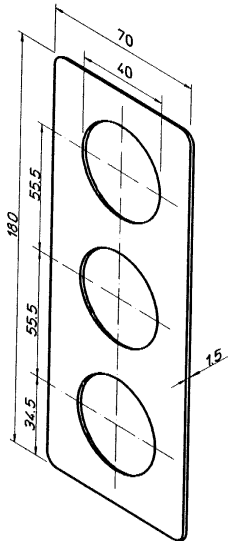

025

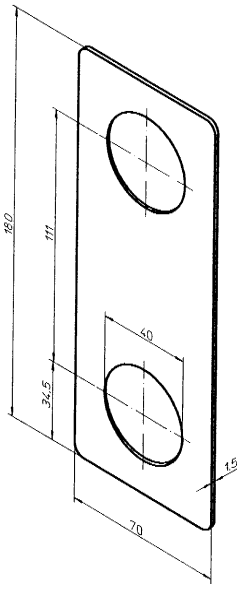

KEYS

Key 414

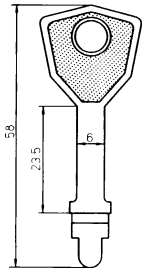

Key 2011

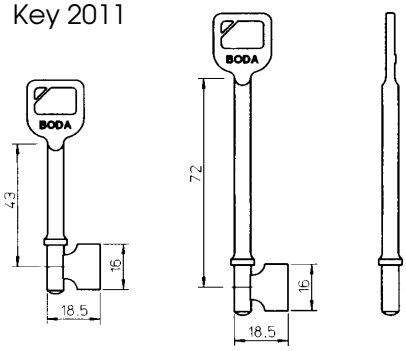

length 43 mm length 72 mm

Key 2014

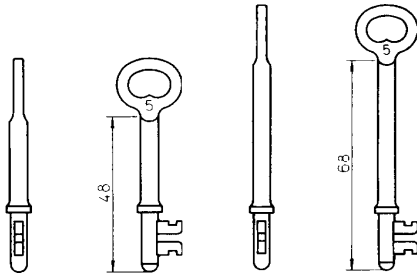

length 48 mm length 68 mm

Key 428, 451S, 2925, 2926, 2928

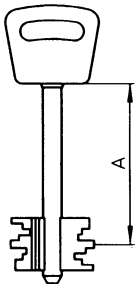

lengths 43 mm, 53 mm, 69 mm

MORTISES IN LOCK CASES IN WOODEN DOORS

SS 81 73 83
SFS 5208
NS 3155

Lateral drilling depends on individual lock.

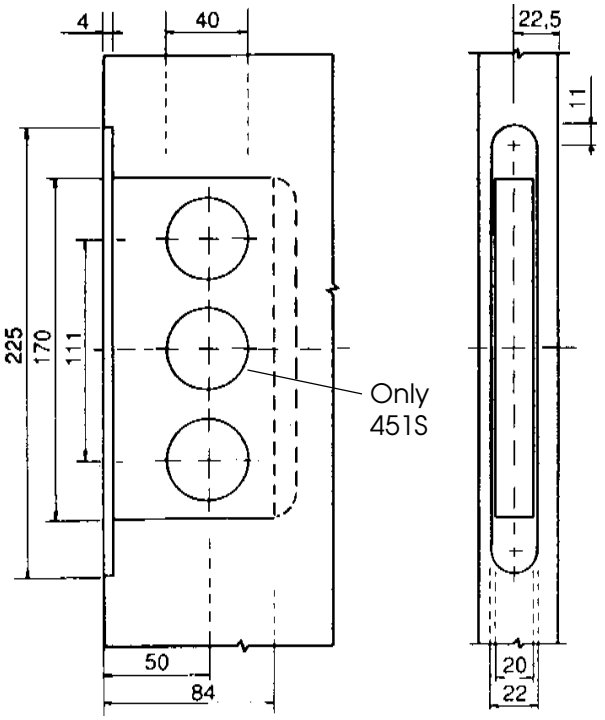

SFS 5209

Lateral drilling depends on individual lock.

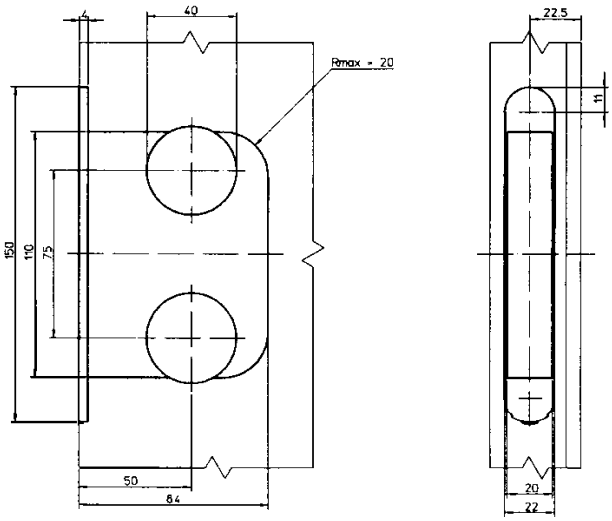

BODA 4240, 4241, 4242

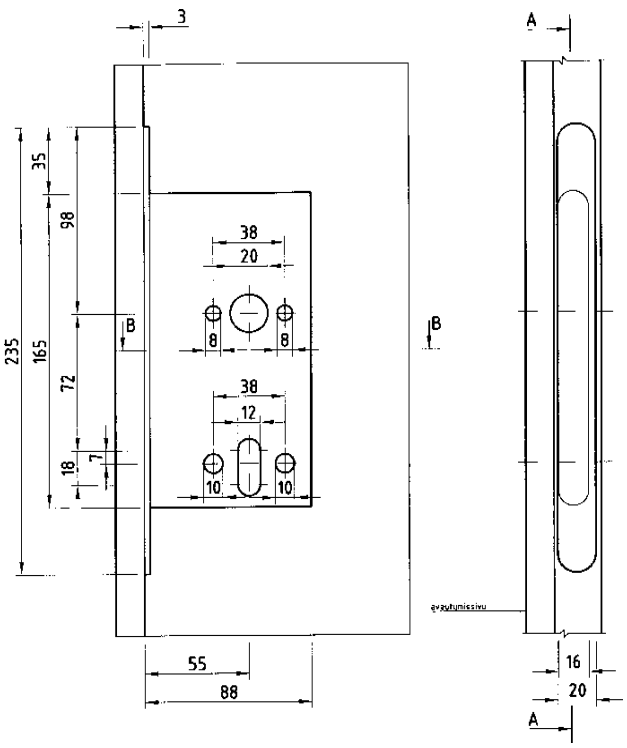

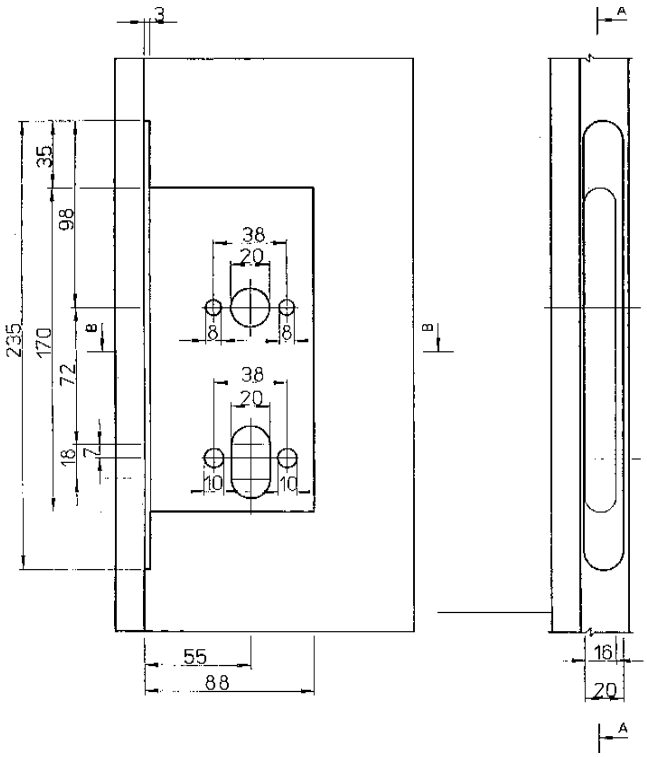

NB. Mortise sizes are for guidance only. For more detailed information please contact our customer service tel. int +358-2-424 402, fax int. +358-2-424 249.

MORTISES IN LOCK CASES IN WOODEN DOORS

BODA 428, 429

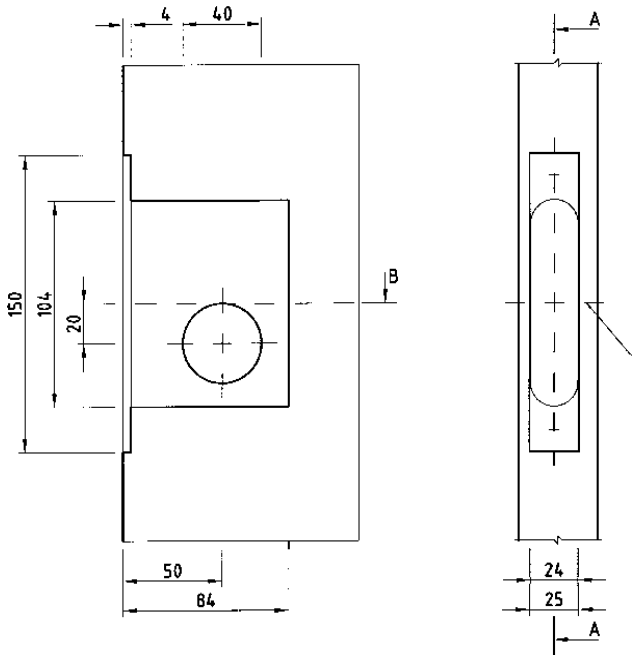

SFS 5210
SS 81 73 82
NS 3154

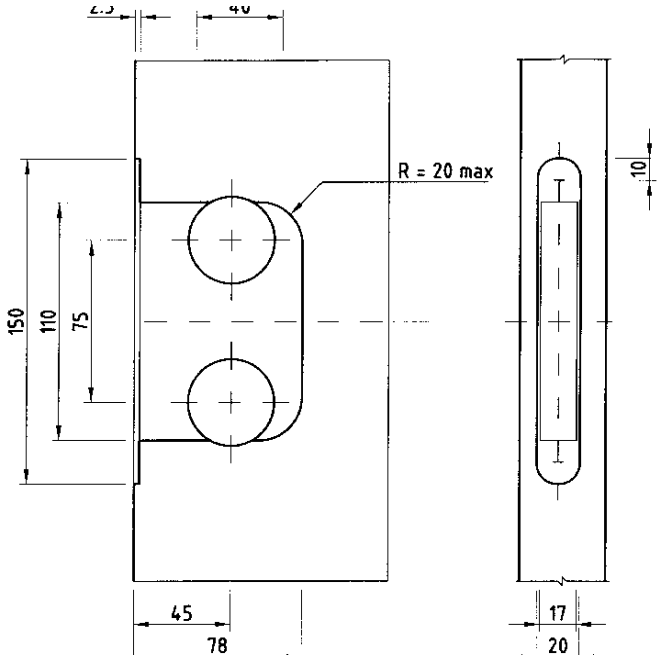

BODA 4250, 4252

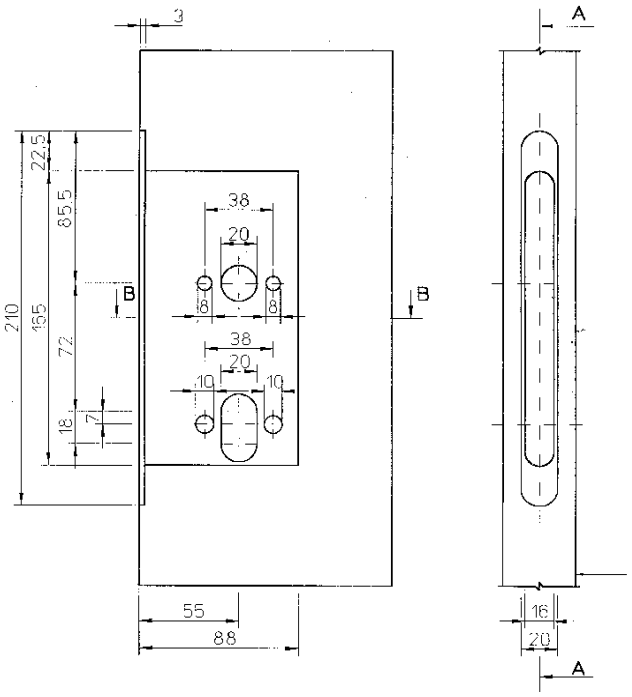

ABLOY 4291

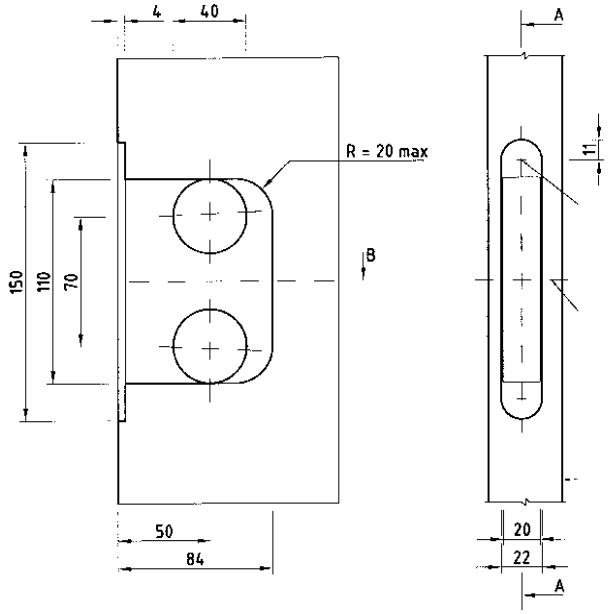

NB. Mortise sizes are for guidance only. For more detailed information please contact our customer service tel. int +358-2-424 402, fax int. +358-2-424 249.

MORTISES IN LOCK CASES IN STILE DOORS

ABLOY 4920, 4921, 4922, 4925
LC 300, LC 301, LC 302, LC 303, LC 305

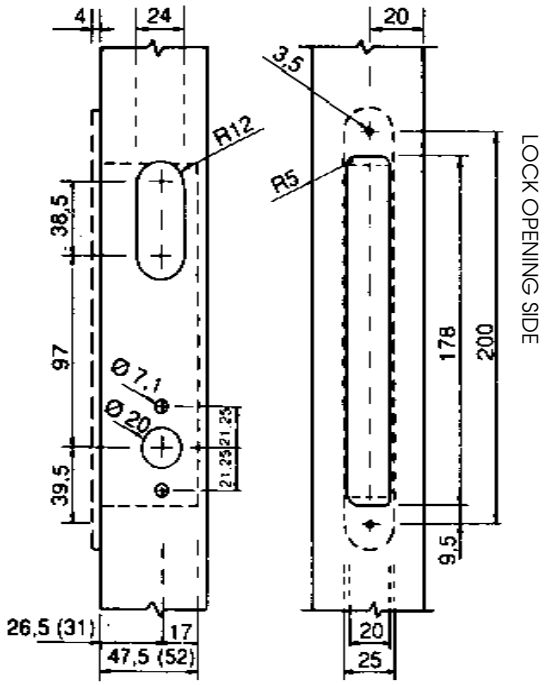

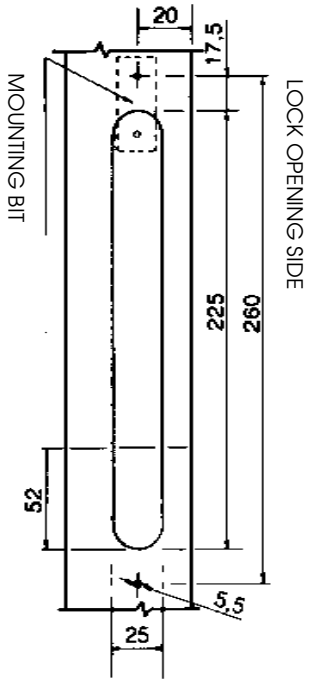

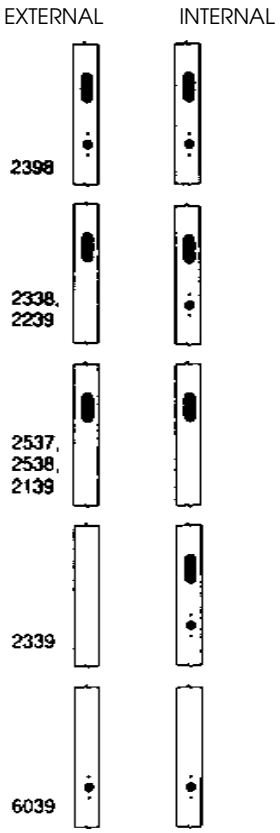

BODA 2014 with DIN fittings

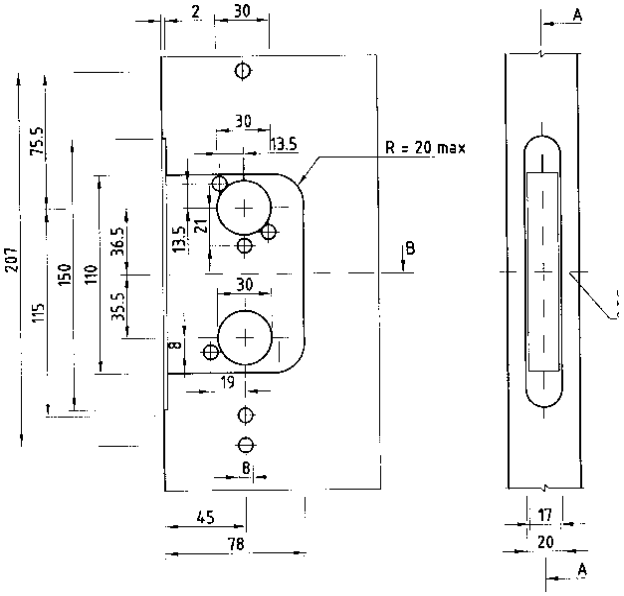

ABLOY 4956
LC 306, LC 307

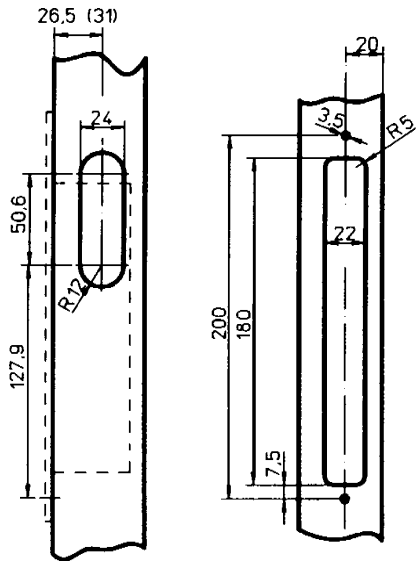

NB. Mortise sizes are for guidance only. For more detailed information please contact our customer service tel. int +358-2-424 402, fax int. +358-2-424 249.

Björkboda Lås Oy Ab is a member of ASSA ABLOY Group, the leading international manufacturer of locksmith and associated security products. Björkboda manufactures a wide range of BODA locks for internal doors and safety locks for external doors, and ABLOY® cylinder locks. Marketing is mainly directed within Finland and Scandinavia, the Baltic States and Eastern and Central Europe. The unrelenting research and development work, and the modern plant makes it possible to offer top-quality products, and to guarantee speedy and flexible deliveries.

ISO 9001
ISO 14001
DNV
CERTIFICATED FIRM

Björkboda Lås Oy Ab
FIN-25860 BJÖRKBODA, FINLAND
Tel. +358 2 424 402. Fax +358 2 424 249

BJÖRKBODA

An ASSA ABLOY Group company

The ASSA ABLOY Group is the world`s leading manufacturer and supplier of locks and associated products, dedicated to satisfying end-user needs for security,safety and convenience.