DORMA

Series 300 / 200

Mortice locks for timber doors

Figure: DORMA lock series 300
DORMA lever handle PREMIUM 8906

Contents

	Page
Mortice locks 300/200 Benefits / Features	3
Mortice locks 300/200 Classification EN 12209 / Lock details	4
Mortice locks 300/200 Handing	5
Mortice locks 300/200 Application	5
Mortice locks 300/200 Summary	6
Mortice locks 300 CE Premier	8
Mortice locks 300 Project	16
Mortice locks 200 CE Contract	20
Mortice locks 200 Standard	25
Strike plates	36
DORMA locks Compatibility	37
Specification text 300 CE, 300, 200 CE, 200	38/39

DORMA Mortice locks for timber doors – a complete range of high quality products

Locks from DORMA offer the very highest standard of quality and functional reliability.
With the use of high-grade materials, precise production techniques and a comprehensive quality management system, all DORMA locks meet demanding technical specifications. Additionally, locks conforming to the technical requirements of DIN 18251 and EN 12209 also offer unbeatable ease of use and security features.

Locks from DORMA are also offered as a set. The package contains the Mortice lock with screws and strike plate.

Further information, specification texts
Additional information, e.g. specification texts, drawings, and installation instructions on many products, can be accessed via electronic media (Internet).

Benefits at a glance

For the architect

- The high quality satin stainless steel surface finish satisfies very high demands with respect to the appearance of the door furniture.

For the trade

- The package contains the Mortice lock with screws and strike plate
- Non-handed lock version to reduce storage space
- Identical fixing screws for lock and strike plate simplify material management
- Having been assigned category of use grade 2 and 3 per EN 12209 the locks can also be reliably installed in buildings subject to heavy pedestrian traffic frequencies
- Optimated processes because DORMA locks and fittings are from one hand
- Not provided for fire-rated doors in Germany
- All the DORMA Mortice locks have following variations:

backset	55 mm
	60 mm
	65 mm
	70 mm
	80 mm
forend	20 mm, square
	20 mm, rounded
	24 mm, square
	24 mm, rounded

For the installer

- DORMA locks offer their precision by a simple, compatible assembling in standard door cuts.
- DORMA locks have consistently uniform sizes each and are interchangeable, also between each series.
- DORMA locks can be used universally by changing the latch handing, without using a tool.
- DORMA locks achieve a long life because of a robust maintenance-free lock mechanism, even under difficult operating conditions.
- DORMA locks can be commonly used with standard fittings, e.g. standard lever handles, profile cylinders, roses/escutcheons/backplastes etc.
- DORMA locks are subject to strict quality requirements and are tested and certified according to EN 12209. For applications with increased security requirements the locks are tested and certified in accordance with national and international standards.

Features	300 CE Premier	300 Project	200 CE Contract	200 Standard
Grade EN 12209	3	3	2	2
CE	●	–	●	–
DIN 18251-1	●	●	●	●
Door Application for:	Public	Public	Office	Office
Latch handing	Reversible	Reversible	Reversible	Reversible
Latch	Satin stainless steel	Satin stainless steel	Satin stainless steel	Solid metal nickel plated
Follower 8 mm	Clamp	Clamp	Standard	Standard
Follower bearing	Steel bushes	Steel bushes	Formed	Formed
Dead bolt	Satin stainless steel	Satin stainless steel	Satin stainless steel	Solid metal nickel plated
Fixing holes	Bushed	Bushed	Unbushed	Unbushed
Forend	Screwed	Screwed	Screwed	Screwed
Forend SSS	AISI 316	AISI 316	AISI 304	AISI 304

● yes – no

Lock details

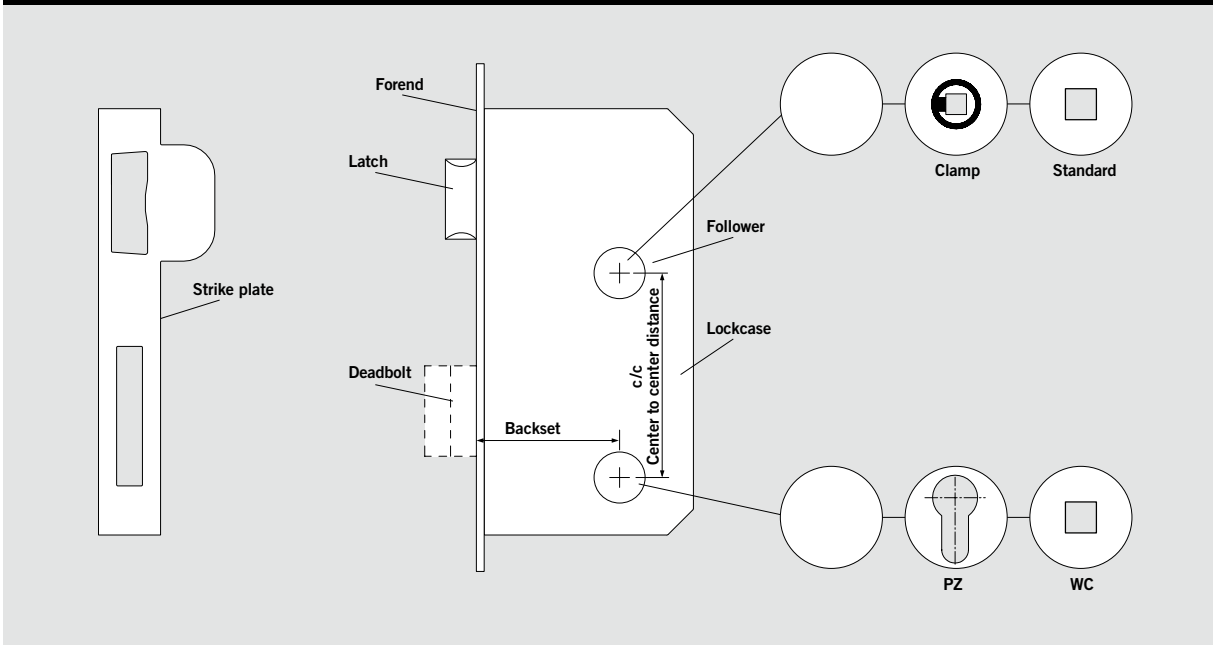

Example Classification code to EN 12209 for the 381 CE lock

Mortice locks 381

3	S	8	1	0	G	4	B	C	2	0

Category of use
e.g. doors in public buildings

Durability
200.000 cycl./120 N load on latch bolt

Door Mass
above 200 kg, closing force 25 N

Fire / smoke doors
approved / 90 min

Safety
no requirements

Key identification
no requirement

Type of spindle operation
for unsprung lever handle

Key operation and locking
Cylinder manually with intermediate

Door application
Hinged door

Security-drill resistance
medium no drill resistance

Corrosion resisistance
very high resistance, NSS 120 h, –20 °C to + 80 °C

Example Classification code to EN 12209 for the 271 lock

Mortice locks 271

2	S	8	0	0	G	3	B	C	2	0

Category of use
e.g. office doors

Durability
200.000 cycl./50 N load on latch bolt

Door Mass
above 200 kg, closing force 25 N

Fire / smoke doors
not approved

Safety
no requirements

Key identification
no requirement

Type of spindle operation
for unsprung lever handle

Key operation and locking
Cylinder manually with intermediate

Door application
Hinged door

Security-drill resistance
medium no drill resistance

Corrosion resisistance
very high resistance, NSS 120 h, –20 °C to + 80 °C

Handing data for entrance door sets

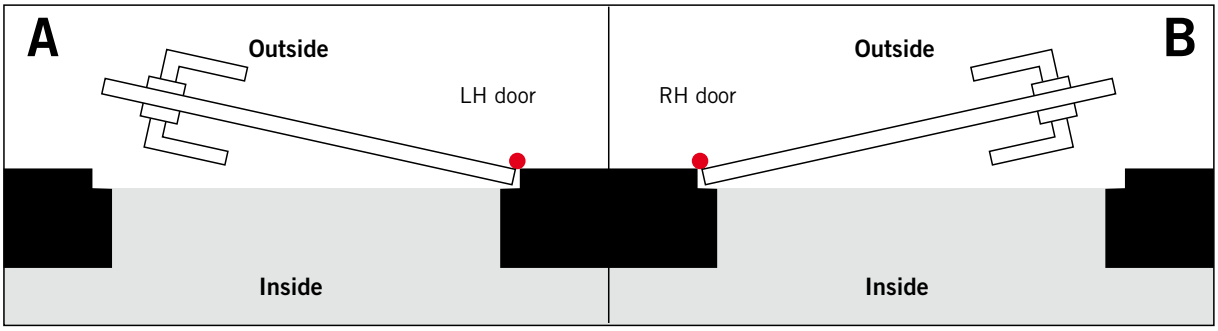

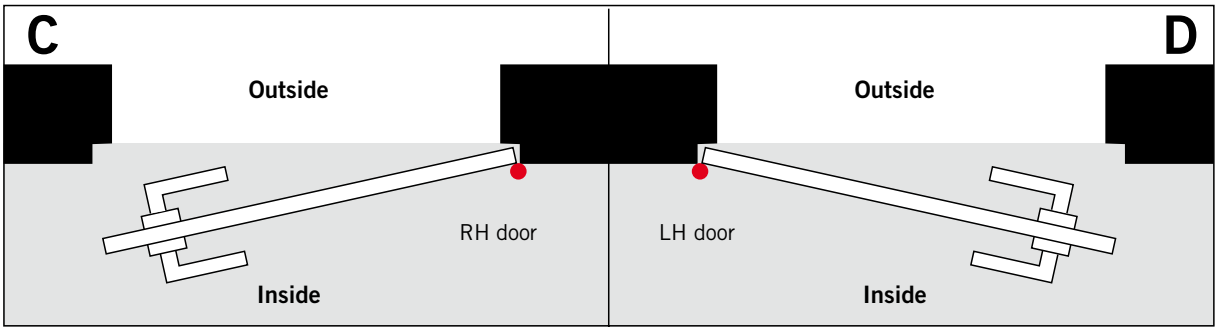

Application with DORMA Beschlagtechnik lever handles

DORMA locks are prepared to be used with the DORMA Beschlagtechnik Premium, Plus and Pure ranges.

Premium for Projects with high demands on function and design

Plus for functional doors

Pure for standard doors

CR EA TE

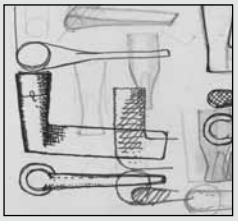

Giving shape to an idea.
Please do not hesitate to contact us.

PREMIER series 300 CE		381	385	388	389	391	392	393	394
Latch type standard		●	●	–	●	antithrust	antithrust	classroom	●
Latch retractable	by handle	●	●	–	●	●	●	●	●
	by cylinder	●	–	–	–	●	–	–	●
Dead bolt	double throw 20 mm	●	–	●	–	●	–	–	●
	single throw 10 mm	–	●	–	–	–	–	●	–
Dead bolt operable	by cylinder EPC	●	–	●	–	●	–	–	●
	by thumbturn	–	●	–	–	–	–	●	–
Centers	72 mm	●	–	●	●	●	●	●	–
	78 mm	–	●	–	–	–	–	–	–
	85 mm	–	–	–	–	–	–	–	●
Backset		55–80	55–80	55–80	55–80	55–80	55–80	55–60	45
Forend	20 mm rounded / square	● / ●	● / ●	● / ●	● / ●	● / ●	● / ●	● / ●	● / ●
	24 mm rounded / square	● / ●	● / ●	● / ●	● / ●	● / ●	● / ●	● / ●	● / ●
More information on page:		8	9	10	11	12	13	14	15

PROJECT series 300		371	375	378	379
Latch type standard		●	●	–	●
Latch retractable	by handle	●	●	–	●
	by cylinder	●	–	–	–
Dead bolt	double throw 20 mm	●	–	●	–
	single throw 10 mm	–	●	–	–
Dead bolt operable	by cylinder EPC	●	–	●	–
	by thumbturn	–	●	–	–
Centers	72 mm	●	–	●	●
	78 mm	–	●	–	–
Backset		55–80	55–80	55–80	55–80
Forend	20 mm rounded / square	● / ●	● / ●	● / ●	● / ●
	24 mm rounded / square	● / ●	● / ●	● / ●	● / ●
More information on page:		16	17	18	19

● yes – no

Series 300/300 CE

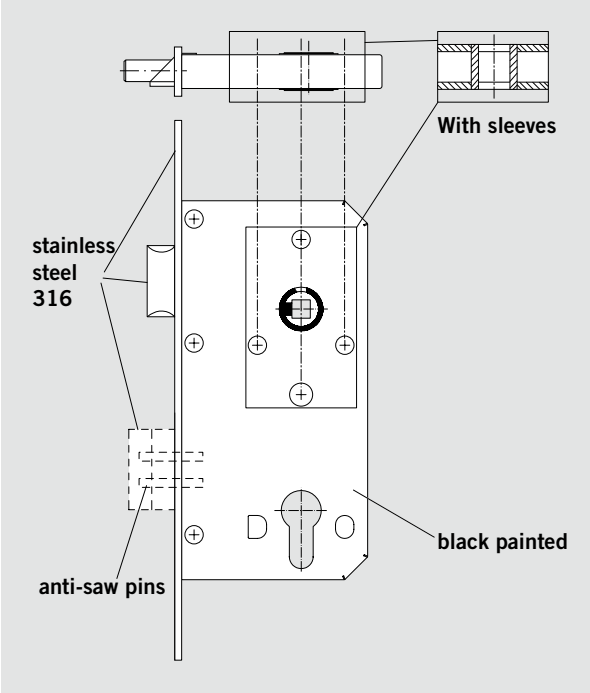

391, 392, 393, 394

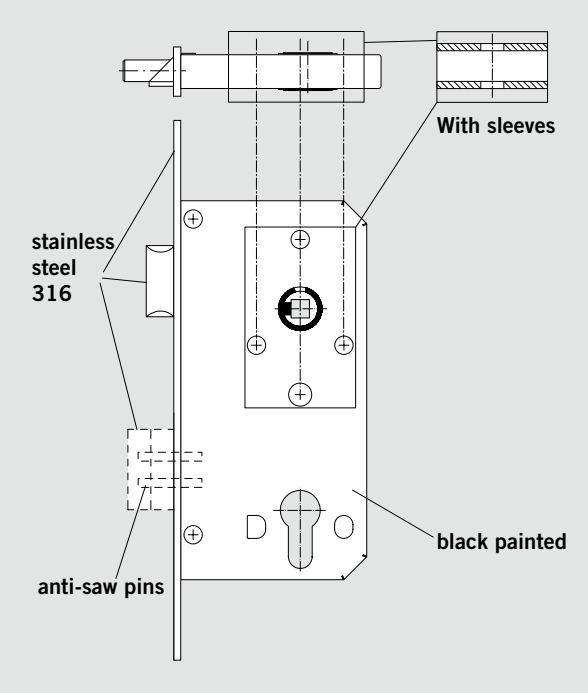

CONTRACT series 200 CE		281	285	288	289	290
Latch type standard		●	●	–	●	●
Latch retractable	by handle	●	●	–	●	●
	by cylinder	●	–	–	–	–
Dead bolt	double throw 20 mm	●	–	●	–	–
	single throw 10 mm	–	●	–	–	–
Dead bolt operable	by cylinder EPC	●	–	●	–	●
	by thumbturn	–	●	–	–	–
Centers	72 mm	●	–	●	●	●
	78 mm	–	●	–	–	–
Backset		55–80	55–80	55–80	55–80	55–80
Forend	20 mm rounded / square	● / ●	● / ●	● / ●	● / ●	● / ●
	24 mm rounded / square	● / ●	● / ●	● / ●	● / ●	● / ●
More information on page:		20	21	22	23	24

STANDARD series 200		271	275	278	279	208	209	232	233	234	235
Latch type standard		●	●	–	●	–	●	roller	–	●	●
Latch retractable	by handle	●	●	–	●	–	●	–	–	●	●
	by cylinder	●	–	–	–	–	–	–	–	–	–
Dead bolt	double throw 20 mm	●	–	●	–	●	–	●	–	–	–
	single throw 10 mm	–	●	–	–	–	–	–	●	–	●
Dead bolt operable	by cylinder EPC	●	–	●	–	●	–	●	–	lockable follower	–
	by thumbturn	–	●	–	–	–	–	–	●	–	–
Centers	72 mm	●	–	●	●	–	–	●	–	●	●
	78 mm	–	●	–	–	–	–	–	●	–	–
	85 mm	–	–	–	–	–	–	–	–	–	–
Backset		55–80	55–80	55–80	55–80	55	55	55–80	55–80	55–80	55–80
Forend	20 mm rounded / square	● / ●	● / ●	● / ●	● / ●	● / ●	● / ●	● / –	● / ●	● / ●	● / ●
	24 mm rounded / square	● / ●	● / ●	● / ●	● / ●	● / ●	● / ●	– / ●	● / ●	● / ●	● / ●
More information on page:		25	26	27	28	29	30	31	32	33	34

● yes – no

Series 200 CE

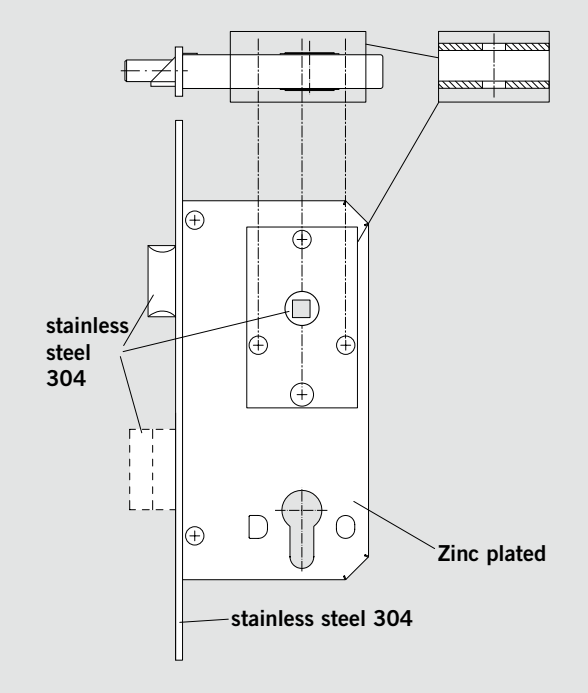

Series 200

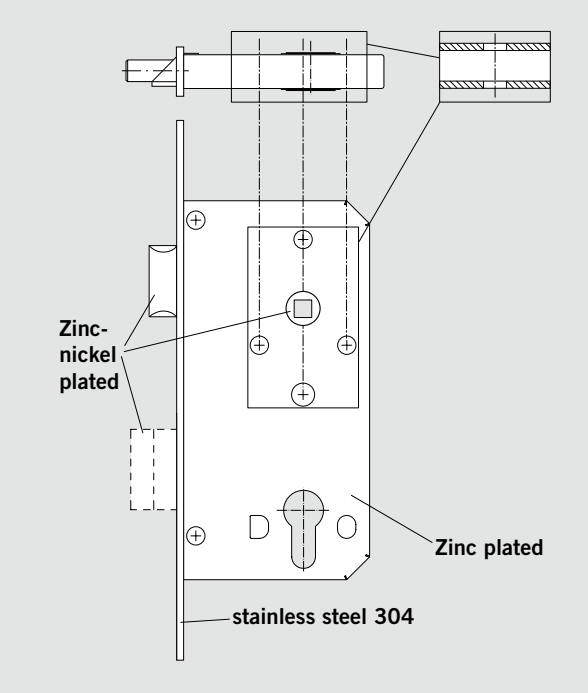

Mortice lock 381

Locks for interior and exterior doors, e.g. in public buildings

Features

Grade 3 – EN 12209,
approved for fire-rated doors with CE certificate
- Lock case size DIN 18251-1, closed case with sleeves, zinc plated,black painted
- lock case prepared for Euro profile cylinder (DIN18252) and standard fittings
- latch handing is reversible
- latch and dead bolt, stainless steel, satin
- Security dead bolt with hardened anti-saw pins
- clamp follower, stainless steel, 8 mm square hole, with separate bush bearing
- centred forend, satin stainless steel 1.4401 / AISI 316

Recommended Strike plate: 20 **side: non-handed**

Classification EN 12209

3	S	8	1	0	G	4	B	C	2	0

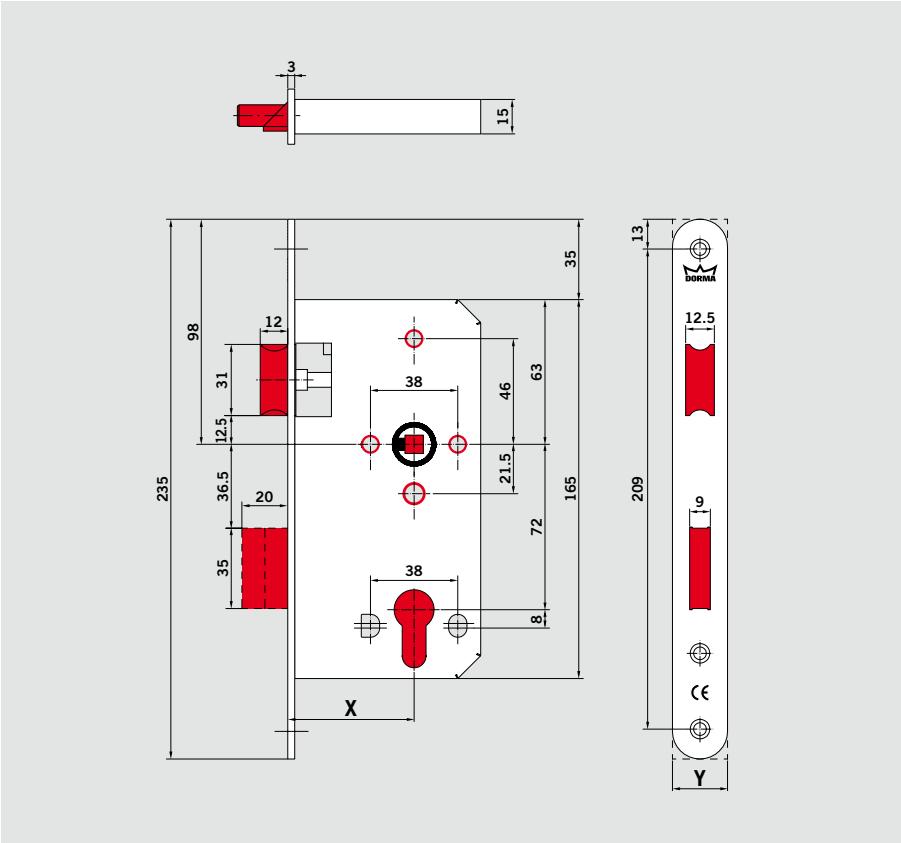

Possible variation

Backset: X
55 mm
60 mm
65 mm
70 mm
80 mm

Dimension of forend: Y
square 20 mm
24 mm
rounded 20 mm
24 mm

DORMA locks are prepared to be used with the levers of DORMA Beschlagtechnik

Mortice lock 385

Locks for bathroom doors, e.g. in public buildings

Features

Grade 3 – EN 12209,
approved for fire-rated doors with CE certificate
- Lock case size DIN 18251-1, closed case with sleeves, zinc plated,black painted
- lock case prepared for thumbturn and standard fittings
- latch handing is reversible
- latch and dead bolt, stainless steel, satin
- Security dead bolt with hardened anti-saw pins
- clamp follower, stainless steel, 8 mm square hole, with separate bush bearing and 8 mm bathroom follower
- centred forend, satin stainless steel 1.4401 / AISI 316

Recommended Strike plate: 20 **side: non-handed**

Classification EN 12209

3	S	8	1	0	G	4	K	G	2	0

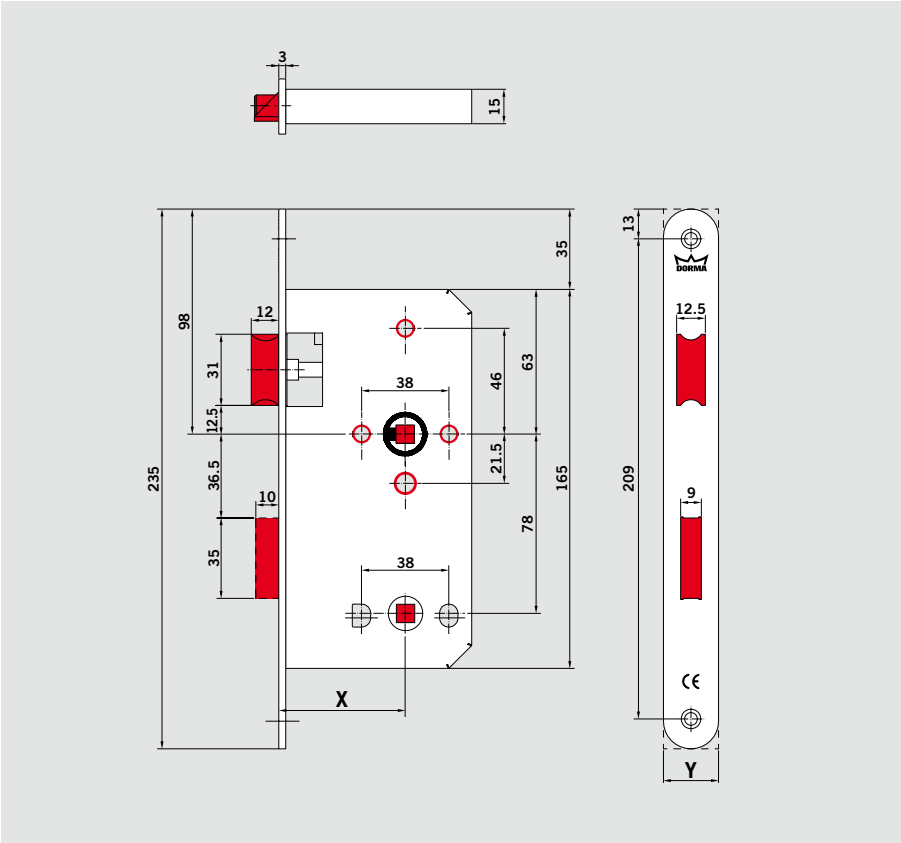

Possible variation

Backset: X
55 mm
60 mm
65 mm
70 mm
80 mm

Dimension of forend: Y
square 20 mm
24 mm
rounded 20 mm
24 mm

DORMA locks are prepared to be used with the levers of DORMA Beschlagtechnik

Mortice lock 388

Locks for interior and exterior doors, e.g. in public buildings

Features

Grade 3 – EN 12209,
approved for fire-rated doors with CE certificate
– Lock case size DIN 18251-1, closed case with sleeves, zinc plated,black painted
– lock case prepared for Euro profile cylinder (DIN18252) and standard fittings
– dead bolt, stainless steel, satin
– Security dead bolt with hardened anti-saw pins
– centred forend, satin stainless steel 1.4401 / AISI 316

Recommended Strike plate: 21 **side: non-handed**

Classification EN 12209

3	S	8	1	0	G	4	B	C	0	0

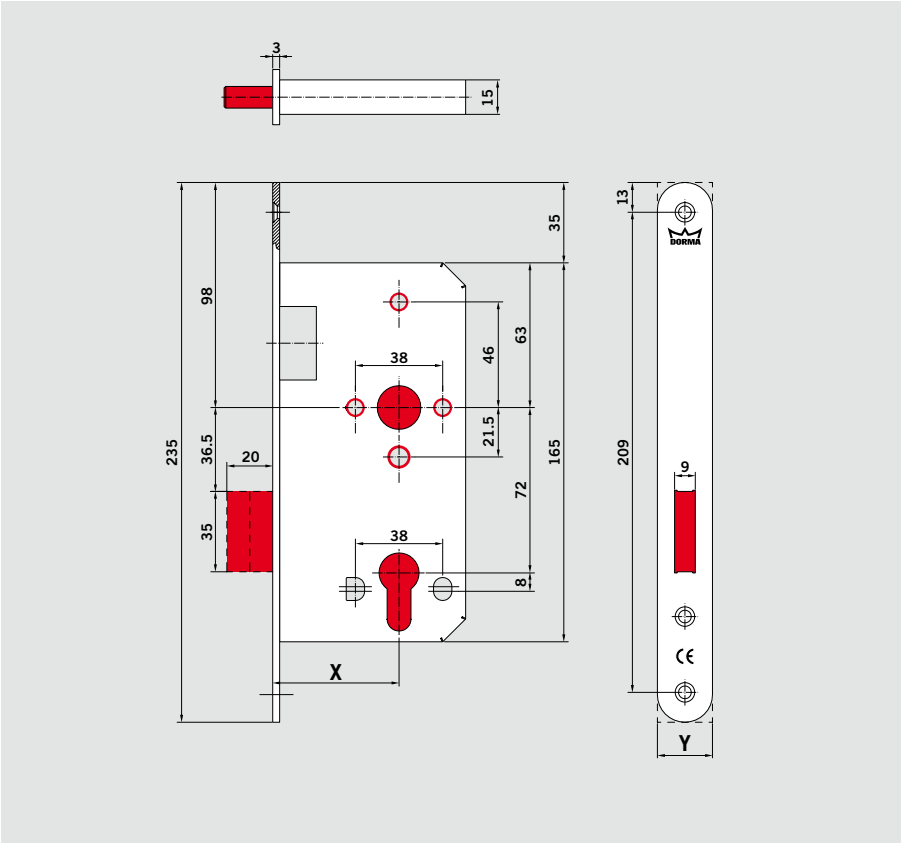

Possible variation

Backset: X
55 mm
60 mm
65 mm
70 mm
80 mm

Dimension of forend: Y
square 20 mm
24 mm
rounded 20 mm
24 mm

Mortice lock 389

Locks for interior and exterior doors, e.g. in public buildings

Features

Grade 3 – EN 12209,
approved for fire-rated doors with CE certificate
– Lock case size DIN 18251-1, closed case with sleeves, zinc plated,black painted
– lock case prepared for standard fittings
– latch handing is reversible
– latch, stainless steel, satin
– clamp follower, stainless steel, 8 mm square hole, with separate bush bearing
– centred forend, satin stainless steel 1.4401 / AISI 316

Recommended Strike plate: 23 **side: non-handed**

Classification EN 12209

3	S	8	1	0	G	4	B	0	2	0

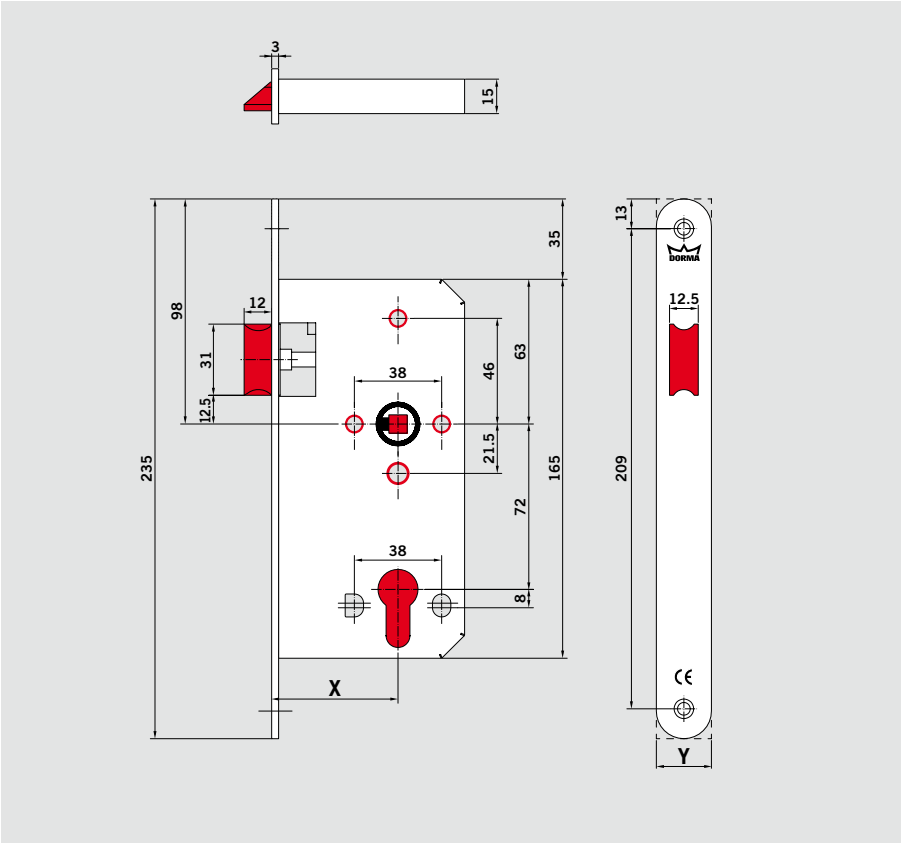

Possible variation

Backset: X
55 mm
60 mm
65 mm
70 mm
80 mm

Dimension of forend: Y
square 20 mm
24 mm
rounded 20 mm
24 mm

DORMA locks are prepared to be used with the levers of DORMA Beschlagtechnik

Mortice lock 391

Locks for interior and exterior doors, e.g. in public buildings

Features

Grade 3 – EN 12209
approved for fire-rated doors with CE certificate
- Lock case size DIN 18251-1, closed case, zinc plated, black painted
- lock case prepared for Euro profile cylinder (DIN18252) and standard fittings
- latch handing is reversible
- anti-thrust latch, with snib
- latch and dead bolt, stainless steel, satin
- Security dead bolt with hardened anti-saw pins
- follower, stainless steel, 8 mm square hole, mounted in drawn steel bushes
- centred forend, satin stainless steel 1.4401 / AISI 316

Recommended Strike plate: 20 **side: non-handed**

Classification EN 12209

3	S	8	1	0	G	3	B	C	2	0

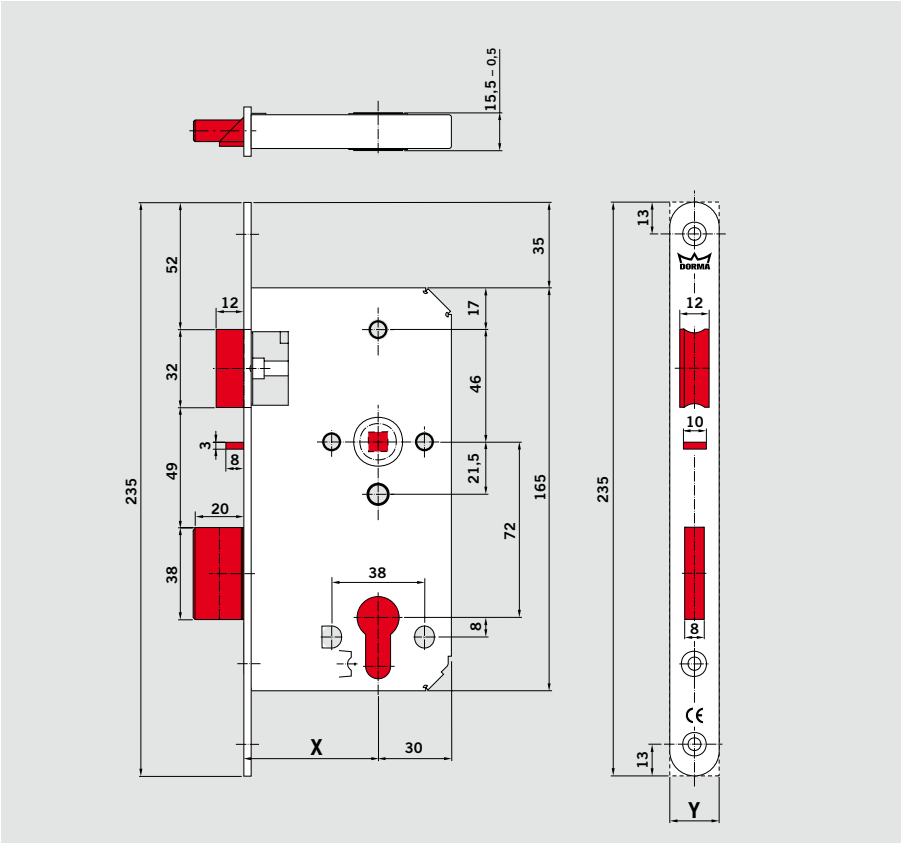

Possible variation

Backset: X
55 mm
60 mm
65 mm
70 mm
80 mm

Dimension of forend: X
square 20 mm
24 mm
rounded 20 mm
24 mm

DORMA locks are prepared to be used with the levers of DORMA Beschlagtechnik

Mortice lock 392

Locks for interior and exterior doors, e.g. in project buildings

Features

Grade 3 – EN 12209
approved for fire-rated doors with CE certificate
- Lock case size DIN 18251-1, closed case, zinc plated, black painted
- lock case prepared for Euro profile cylinder (DIN18252) and standard fittings
- latch handing is reversible
- anti-trust latch with snib
- latch, stainless steel, satin
- follower, stainless steel, 8 mm square hole, mounted in drawn steel bushes
- centred forend, satin stainless steel 1.4401 / AISI 316

Recommended Strike plate: 23 **side: non-handed**

Classification EN 12209

3	S	8	1	0	G	3	B	0	2	0

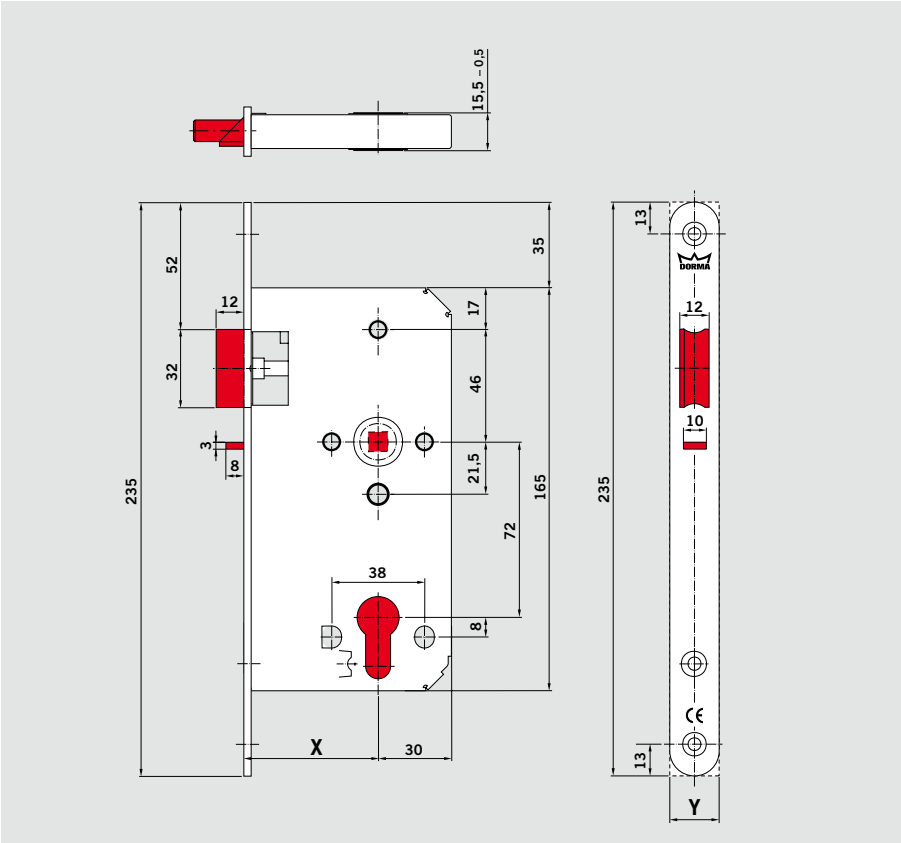

Possible variation

Backset: X
55 mm
60 mm
65 mm
70 mm
80 mm

Dimension of forend: Y
square 20 mm
24 mm
rounded 20 mm
24 mm

DORMA locks are prepared to be used with the levers of DORMA Beschlagtechnik

Mortice lock 393

Locks for classroom doors

Features

Grade 3 – EN 12209
approved for fire-rated doors with CE certificate
- Lock case size DIN 18251-1, closed case, zinc plated, black painted
- lock case prepared for Euro profile cylinder (DIN18252) and standard fittings
- latch handing is reversible
- anti-trust latch with snib
- latch, stainless steel, satin
- Split follower, stainless steel, 8 mm square hole, mounted in drawn steel bushes, outside follower, lockable by cylinder
- centred forend, satin stainless steel 1.4401 / AISI 316

Recommended Strike plate: 23 **side: non-handed**

Classification EN 12209

3	S	8	1	0	G	3	B	0	2	0

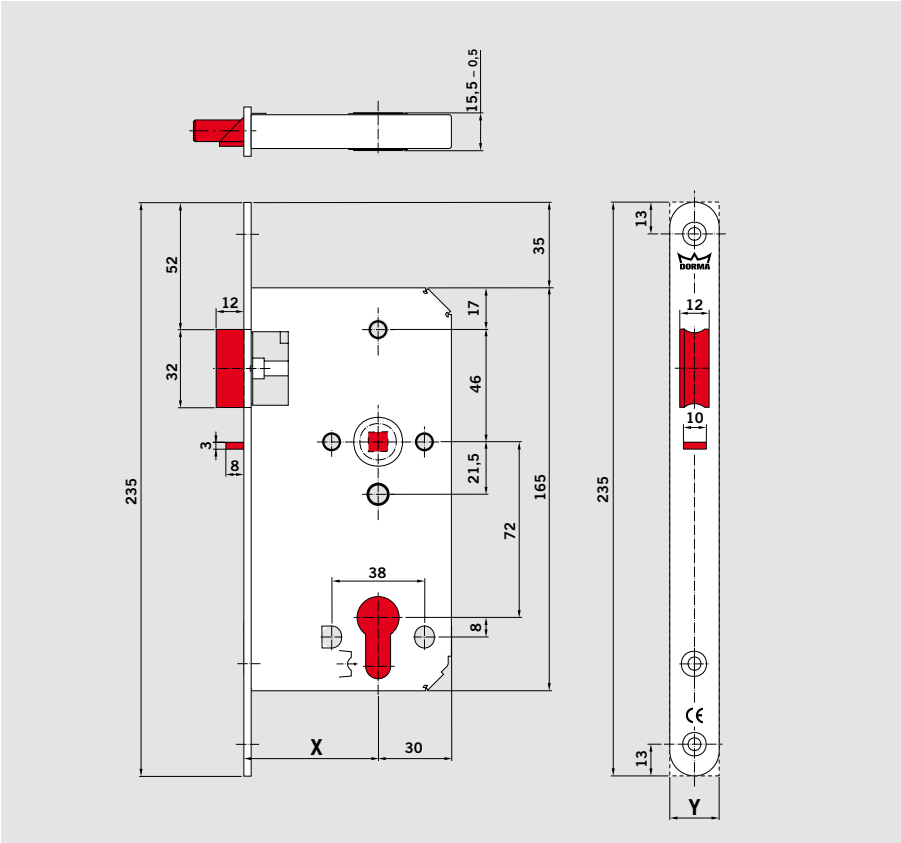

Possible variation

Backset: X
55 mm
60 mm

Dimension of forend: Y
square 20 mm
24 mm
rounded 20 mm
24 mm

DORMA locks are prepared to be used with the levers of DORMA Beschlagtechnik

Mortice lock 394

Locks for interior and exterior doors, e.g. in public buildings

Features

Grade 3 – EN 12209
approved for fire-rated doors with CE certificate
- Lock case size DIN 18251-1, closed case, zinc plated, black painted
- lock case prepared for Euro profile cylinder (DIN18252) and standard fittings
- latch handing is reversible
- latch and dead bolt, stainless steel, satin
- follower, stainless steel, 8 mm square hole, mounted in drawn steel bushes
- centred forend, satin stainless steel 1.4401 / AISI 316

Recommended Strike plate: 20 **side: non-handed**

Classification EN 12209

3	S	8	1	0	G	3	B	C	2	0

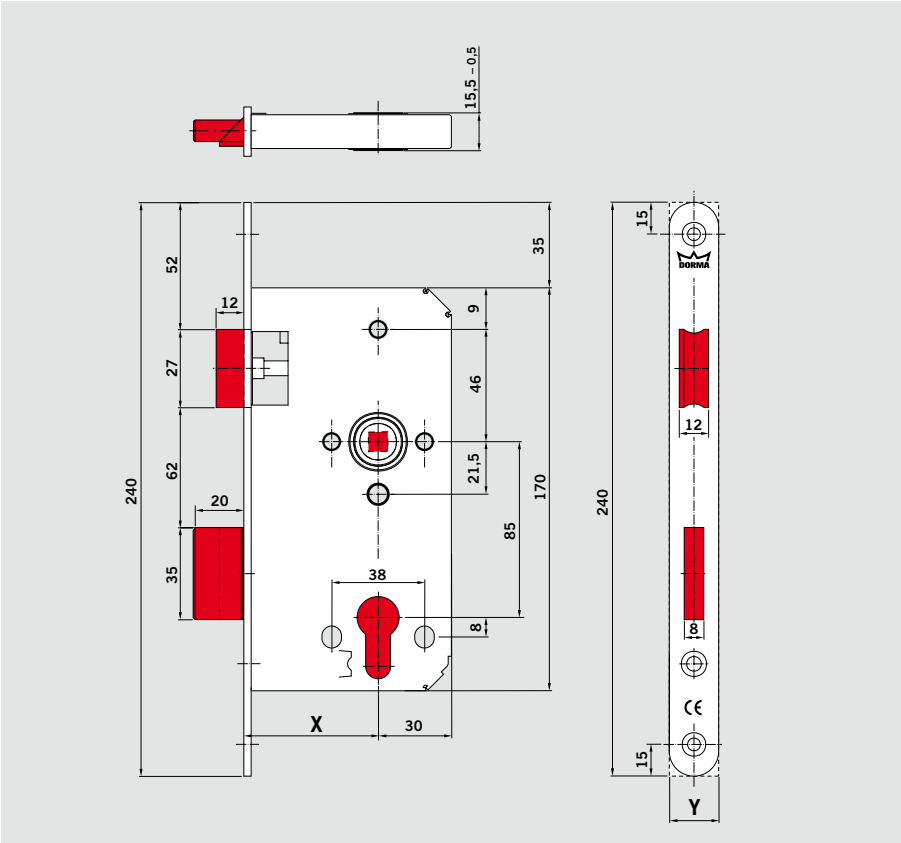

Possible variation

Backset: X
45 mm

Dimension of forend: Y
square 20 mm
24 mm
rounded 20 mm
24 mm

DORMA locks are prepared to be used with the levers of DORMA Beschlagtechnik

Mortice lock 371

Locks for interior and exterior doors, e.g. in public buildings

Features

Grade 3 – EN 12209
- Lock case size DIN 18251-1, closed case with sleeves, zinc plated,black painted
- lock case prepared for Euro profile cylinder (DIN18252) and standard fittings
- latch handing is reversible
- latch and dead bolt, stainless steel, satin
- Security dead bolt with hardened anti-saw pins
- clamp follower, stainless steel, 8 mm square hole, with separate bush bearing
- centred forend, satin stainless steel 1.4401 / AISI 316

Recommended Strike plate: 20 **side: non-handed**

Classification EN 12209

3	S	8	0	0	G	4	B	C	2	0

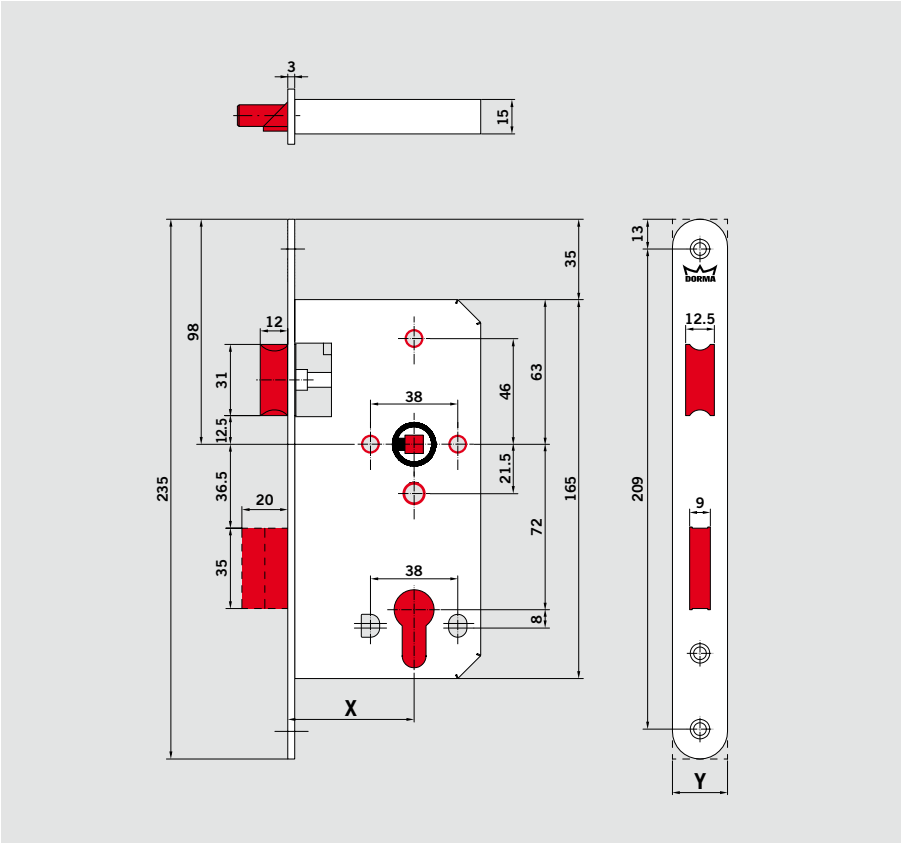

Possible variation

Backset: X

55 mm
60 mm
65 mm
70 mm
80 mm

Dimension of forend: Y

square 20 mm
24 mm
rounded 20 mm
24 mm

DORMA locks are prepared to be used with the levers of DORMA Beschlagtechnik

Mortice lock 375

Locks for bathroom doors, e.g. in public buildings

Features

Grade 3 – EN 12209
- Lock case size DIN 18251-1, closed case with sleeves, zinc plated,black painted
- lock case prepared for thumbturn and standard fittings
- latch handing is reversible
- latch and dead bolt, stainless steel, satin
- Security dead bolt with hardened anti-saw pins
- clamp follower, stainless steel, 8 mm square hole, with separate bush bearing, and 8 mm bathroom follower
- centred forend, satin stainless steel 1.4401 / AISI 316

Recommended Strike plate: 20 **side: non-handed**

Classification EN 12209

3	S	8	0	0	G	4	K	G	2	0

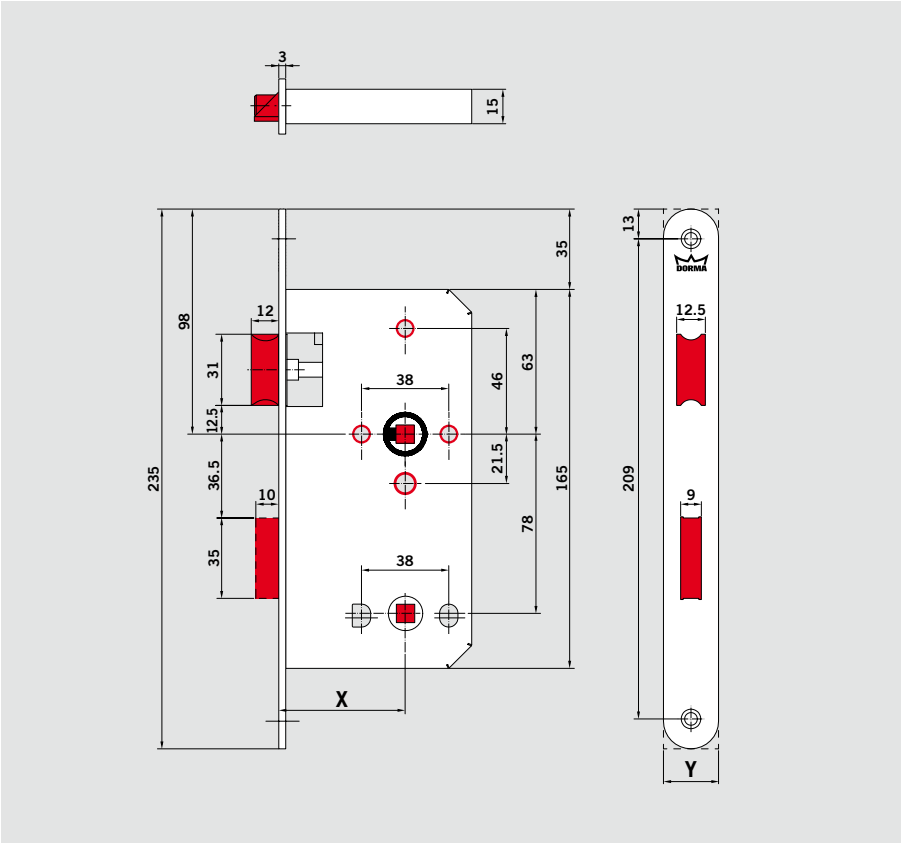

Possible variation

Backset: X

55 mm
60 mm
65 mm
70 mm
80 mm

Dimension of forend: Y

square 20 mm
24 mm
rounded 20 mm
24 mm

DORMA locks are prepared to be used with the levers of DORMA Beschlagtechnik

Mortice lock 378

Locks for interior and exterior doors, e.g. in public buildings

Features

Grade 3 – EN 12209
- Lock case size DIN 18251-1, closed case with sleeves, zinc plated,black painted
- lock case prepared for Euro profile cylinder (DIN18252) and standard fittings
- dead bolt, stainless steel, satin
- Security dead bolt with hardened anti-saw pins
- centred forend, satin stainless steel 1.4401 / AISI 316

Recommended Strike plate: 21 **side: non-handed**

Classification EN 12209

3	S	8	0	0	G	4	B	C	0	0

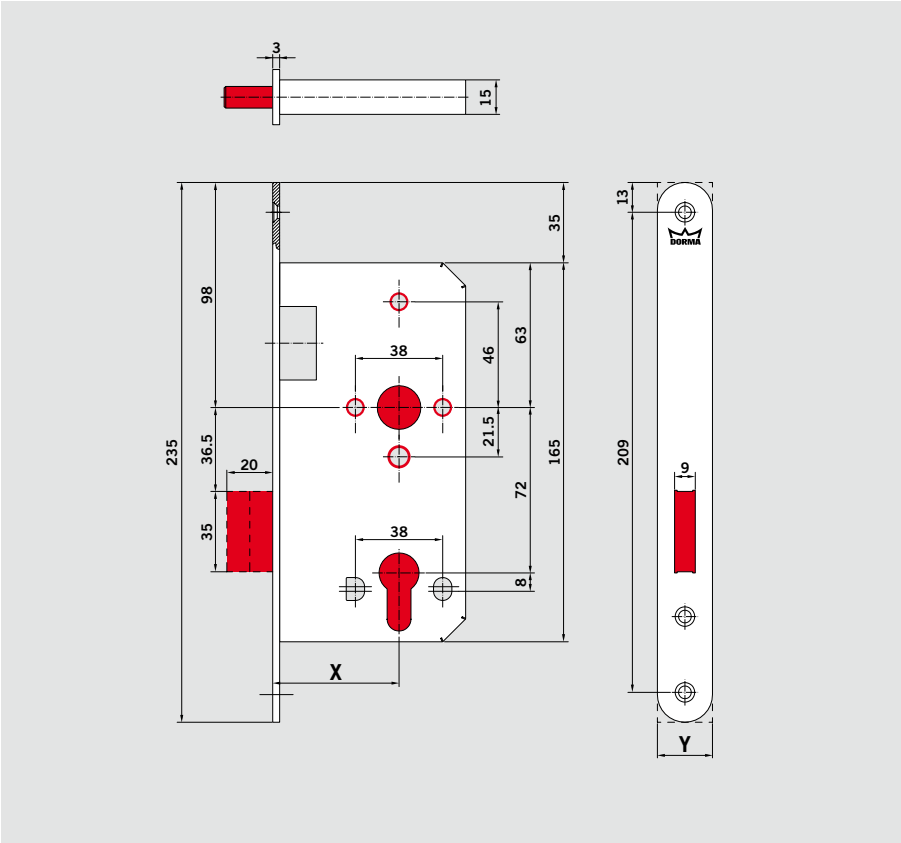

Possible variation

Backset: X

55 mm
60 mm
65 mm
70 mm
80 mm

Dimension of forend: Y

square 20 mm
24 mm
rounded 20 mm
24 mm

DORMA locks are prepared to be used with the levers of DORMA Beschlagtechnik

Mortice lock 379

Locks for interior and exterior doors, e.g. in public buildings

Features

Grade 2 – EN 12209
- Lock case size DIN 18251-1, closed case with sleeves, zinc plated,black painted
- lock case prepared for standard fittings
- latch handing is reversible
- latch, stainless steel, satin
- clamp follower, stainless steel, 8 mm square hole, mounted in drawn steel bushes
- centred forend, satin stainless steel 1.4401 / AISI 316, changeable

Recommended Strike plate: 23 **side: non-handed**

Classification EN 12209

3	S	8	0	0	G	4	B	0	2	0

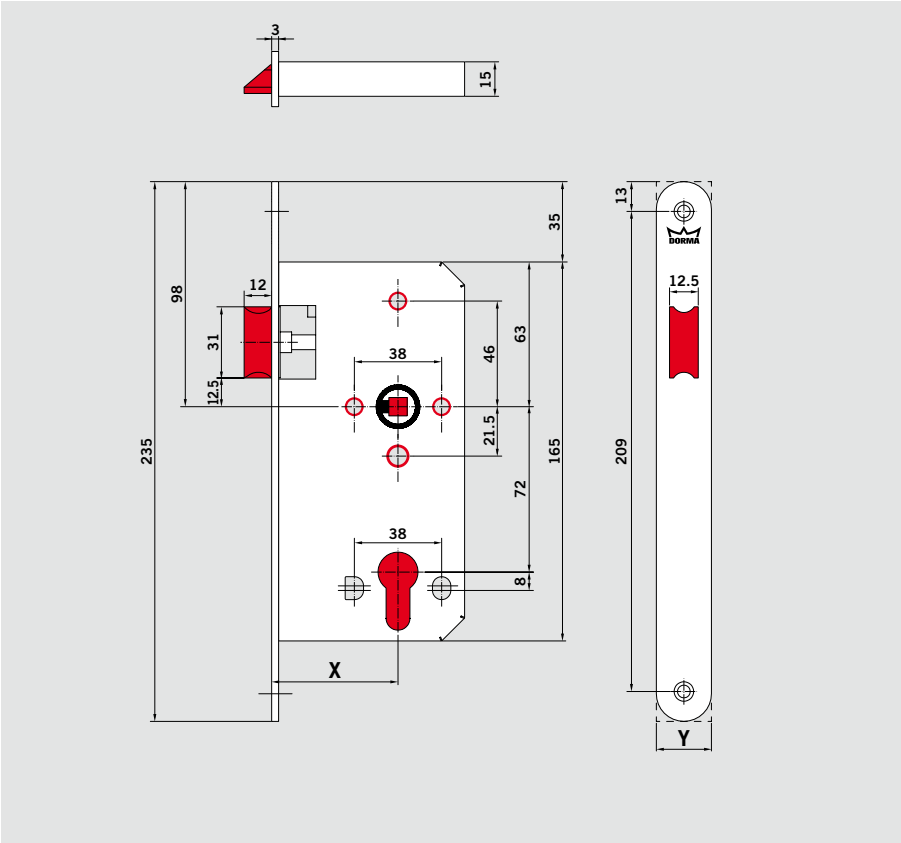

Possible variation

Backset: X

55 mm
60 mm
65 mm
70 mm
80 mm

Dimension of forend: Y

square 20 mm
24 mm
rounded 20 mm
24 mm

DORMA locks are prepared to be used with the levers of DORMA Beschlagtechnik

Highlights of the 300 series

300 CE	300
Category of use Grade EN 12209	3	3
CE	●	-
Lock case size DIN 18251-1	●	●
Door application for	Public	Public
Latch handing	Reversible	Reversible
Latch	Satin stainless steel	Solid metal nickel plated
Follower, 8mm	Clamp	Clamp
Follower bearing	with seperate bush bearing	with seperate bush bearing
Dead bolt	Satin stainless steel	Solid metal nickel plated
Dead bolt operable by Cylinder EPC	●	●
by thumbturn	●	●
Fixing holes	Bushed	Bushed
Forend	Screwed	Screwed
Forend SSS	AISI 316	AISI 316

● yes – no

- The high quality satin stainless steel surface finish satisfies very high demands with respect to the appearance of the door furniture.
- The package contains the Mortice lock with screws and strike plate
- Non-handed lock version to reduce storage space
- Identical fixing screws for lock and strike plate simplify material management
- Having been assigned category of use grade 3 per EN 12209 the locks can also be reliably installed in buildings subject to heavy pedestrian traffic frequencies
- All the DORMA Mortice locks have following variations:

backset 55 mm
60 mm
65 mm
70 mm
80 mm

forend 20 mm, square
20 mm, rounded
24 mm, square
24 mm, rounded

- DORMA locks achieve a long life because of a robust maintenance-free lock mechanism, even under difficult operating conditions.
- DORMA locks are prepared to be used with the levers of DORMA Beschlagtechnik

Mortice lock 281

Locks for interior and exterior doors, e.g. in office buildings

Features

Grade 2 – EN 12209
approved for fire-rated doors with CE certificate
– Lock case size DIN 18251-1, closed case, zinc plated
– lock case prepared for Euro profile cylinder (DIN18252) and standard fittings
– latch handing is reversible
– latch and dead bolt, stainless steel, satin
– follower, stainless steel, 8 mm square hole, mounted in drawn steel bushes
– centred forend, satin stainless steel 1.4301 / AISI 304

Recommended Strike plate: 20 **side: non-handed**

Classification EN 12209

2	S	8	1	0	G	3	B	C	2	0

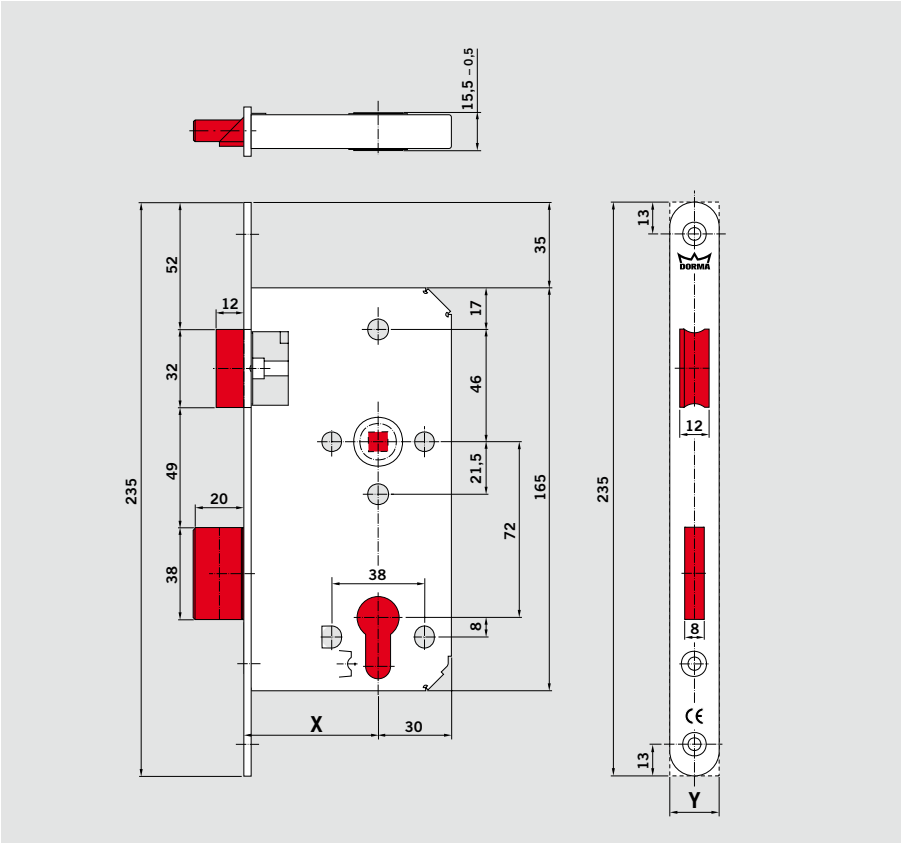

Possible variation

Backset: X
55 mm
60 mm
65 mm
70 mm
80 mm

Dimension of forend: Y
square 20 mm
24 mm
rounded 20 mm
24 mm

DORMA locks are prepared to be used with the levers of DORMA Beschlagtechnik

Mortice lock 285

Locks for bathroom doors, e.g. in office buildings

Features

Grade 2 – EN 12209
approved for fire-rated doors with CE certificate
– Lock case size DIN 18251-1, closed case, zinc plated
– lock case prepared for thumbturn
  and standard fittings
– latch handing is reversible
– latch and dead bolt, stainless steel, satin
– follower, stainless steel, 8 mm square hole,
  mounted in drawn steel bushes and 8 mm bathroom
  follower
– centred forend, satin stainless steel 1.4301 / AISI 304

Recommended Strike plate: 20 **side: non-handed**

Classification EN 12209

2	S	8	1	0	G	3	K	G	2	0

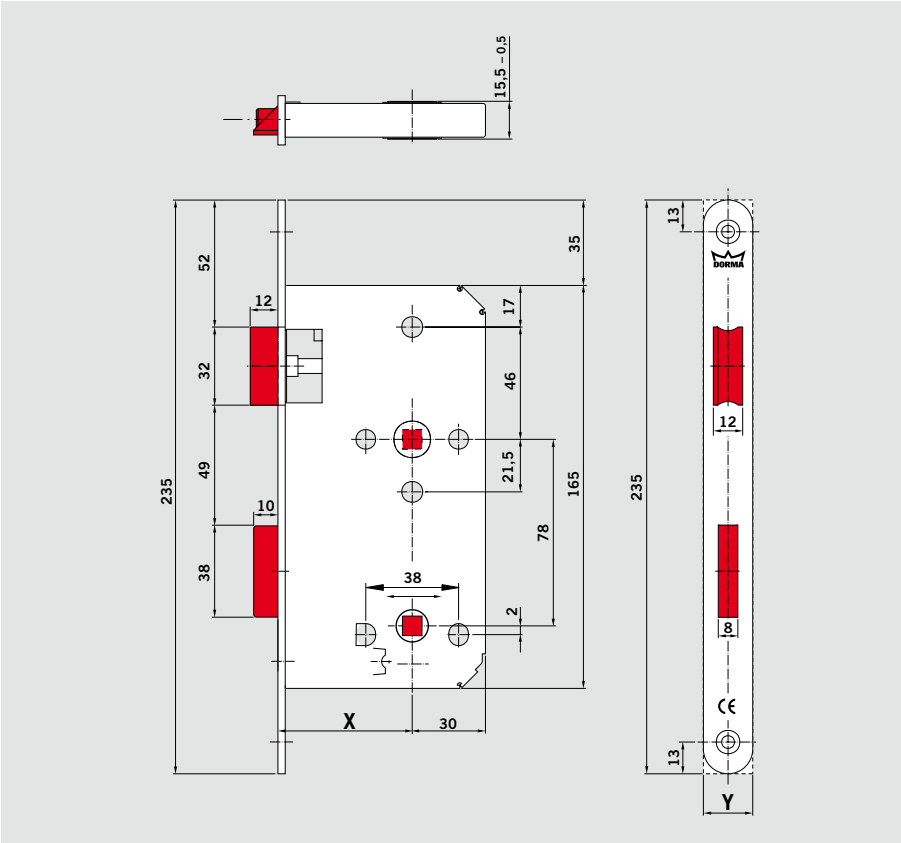

Possible variation

Backset: X
55 mm
60 mm
65 mm
70 mm
80 mm

Dimension of forend: Y
square 20 mm
24 mm
rounded 20 mm
24 mm

DORMA locks are prepared to be used with the levers of DORMA Beschlagtechnik

Mortice lock 288

Locks for interior and exterior doors, e.g. in office buildings

Features

Grade 2 – EN 12209
approved for fire-rated doors with CE certificate
– Lock case size DIN 18251-1, closed case, zinc plated
– lock case prepared for Euro profile cylinder (DIN18252) and standard fittings
– dead bolt, stainless steel, satin
– centred forend, satin stainless steel 1.4301 / AISI 304

Recommended Strike plate: 21 **side: non-handed**

Classification EN 12209

2	S	8	1	0	G	3	B	C	0	0

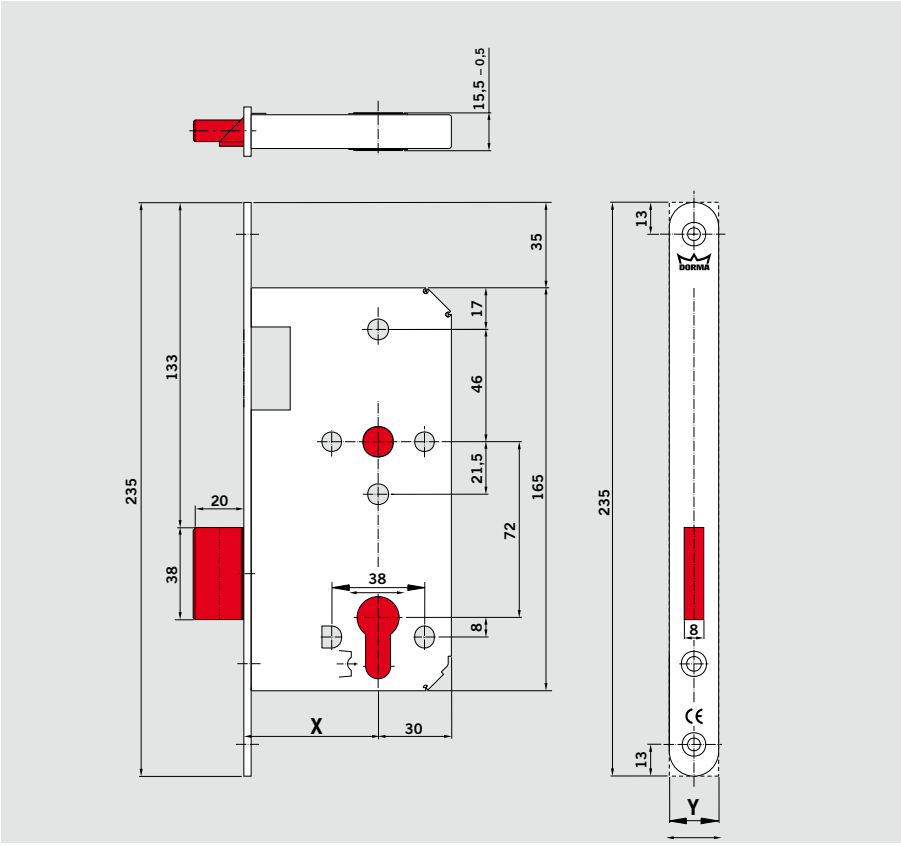

Possible variation

Backset: X
55 mm
60 mm
65 mm
70 mm
80 mm

Dimension of forend: Y
square 20 mm
24 mm
rounded 20 mm
24 mm

Mortice lock 289

Locks for interior and exterior doors, e.g. in office buildings

Features

Grade 2 – EN 12209
approved for fire-rated doors with CE certificate
– Lock case size DIN 18251-1, closed case, zinc plated
– lock case prepared for Euro profile cylinder (DIN18252) and standard fittings
– latch handing is reversible
– latch, stainless steel, satin
– follower, stainless steel, 8 mm square hole, mounted in drawn steel bushes
– centred forend, satin stainless steel 1.4301 / AISI 304

Recommended Strike plate: 23 **side: non-handed**

Classification EN 12209

2	S	8	1	0	G	3	B	0	2	0

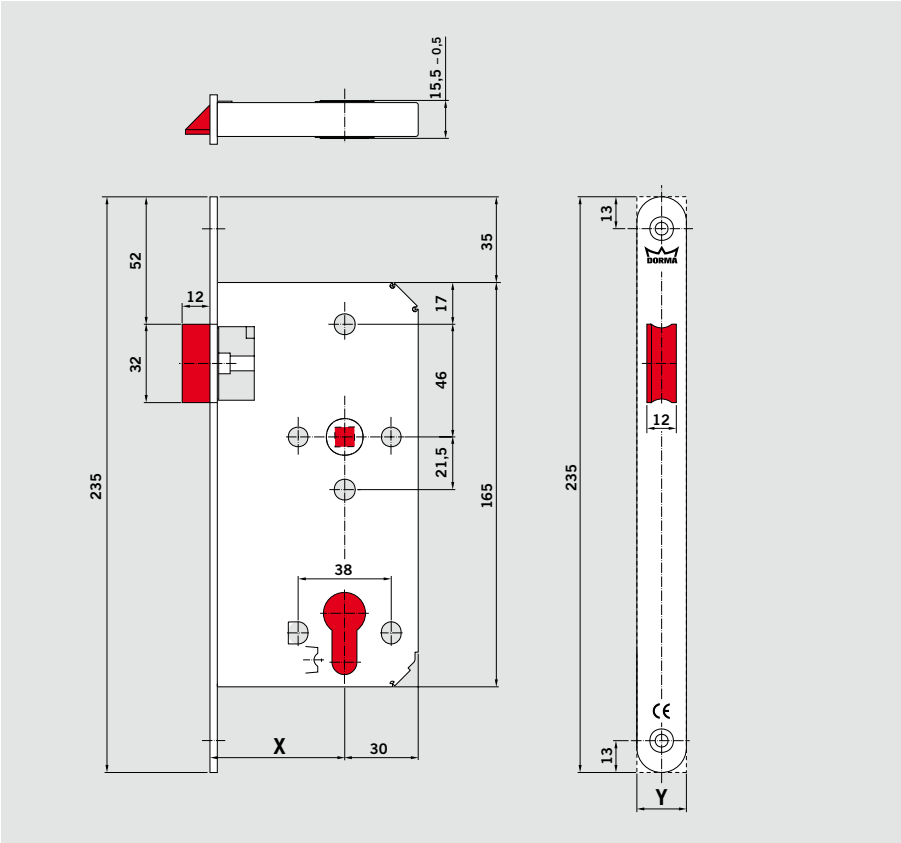

Possible variation

Backset: X
55 mm
60 mm
65 mm
70 mm
80 mm

Dimension of forend: Y
square 20 mm
24 mm
rounded 20 mm
24 mm

DORMA locks are prepared to be used with the levers of DORMA Beschlagtechnik

Mortice lock 290

Locks for interior and exterior doors, e.g. in office buildings

Features

Grade 2 – EN 12209
approved for fire-rated doors with CE certificate
– Lock case size DIN 18251-1, closed case, zinc plated
– lock case prepared for Euro profile cylinder (DIN18252) and standard fittings
– latch handing is reversible, with night latch function
– latch, stainless steel, satin
– follower, stainless steel, 8 mm square hole, mounted in drawn steel bushes
– centred forend, satin stainless steel 1.4301 / AISI 304

Recommended Strike plate: 23 **side: non-handed**

Classification EN 12209

2	S	8	1	0	G	3	B	0	2	0

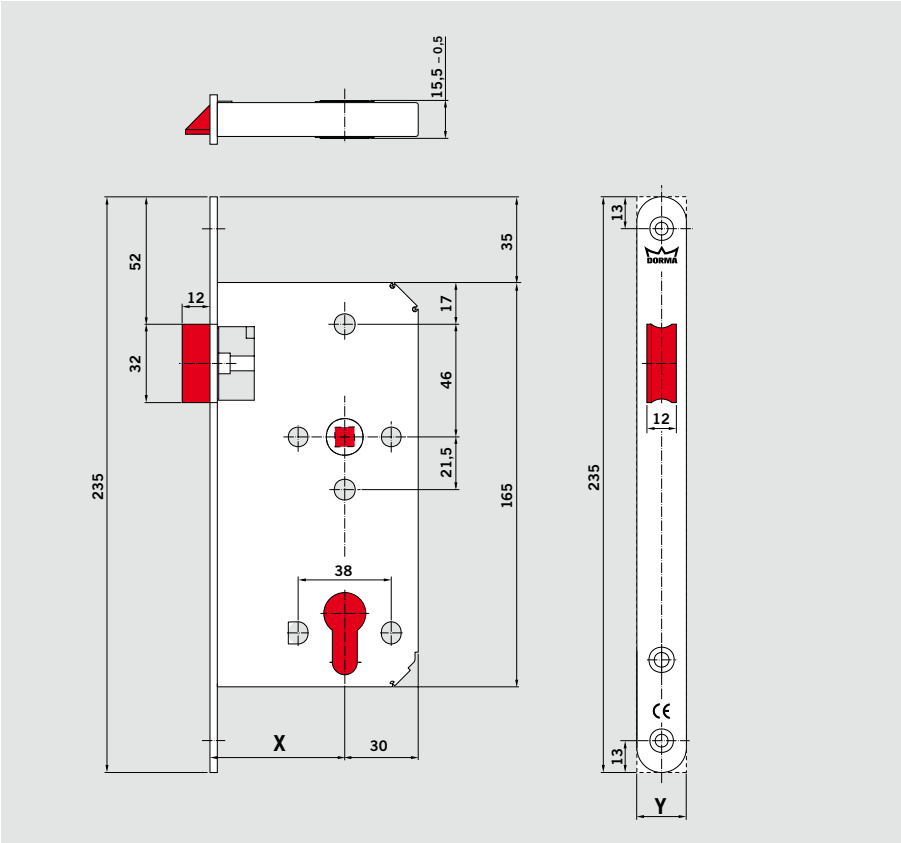

Possible variation

Backset: X
55 mm
60 mm
65 mm
70 mm
80 mm

Dimension of forend: Y
square 20 mm
24 mm
rounded 20 mm
24 mm

DORMA locks are prepared to be used with the levers of DORMA Beschlagtechnik

Mortice lock 271

Locks for interior and exterior doors, e.g. in office buildings

Features

Grade 2 – EN 12209
- Lock case size DIN 18251-1, closed case, zinc plated
- lock case prepared for Euro profile cylinder (DIN18252) and standard fittings
- latch handing is reversible
- latch and dead bolt, zinc, nickel plated
- follower, steel blade, 8 mm square hole, mounted in drawn steel bushes
- centred forend, satin stainless steel 1.4301 / AISI 304, changeable

Recommended Strike plate: 20 **side: non-handed**

Classification EN 12209

2	S	8	0	0	G	3	B	C	2	0

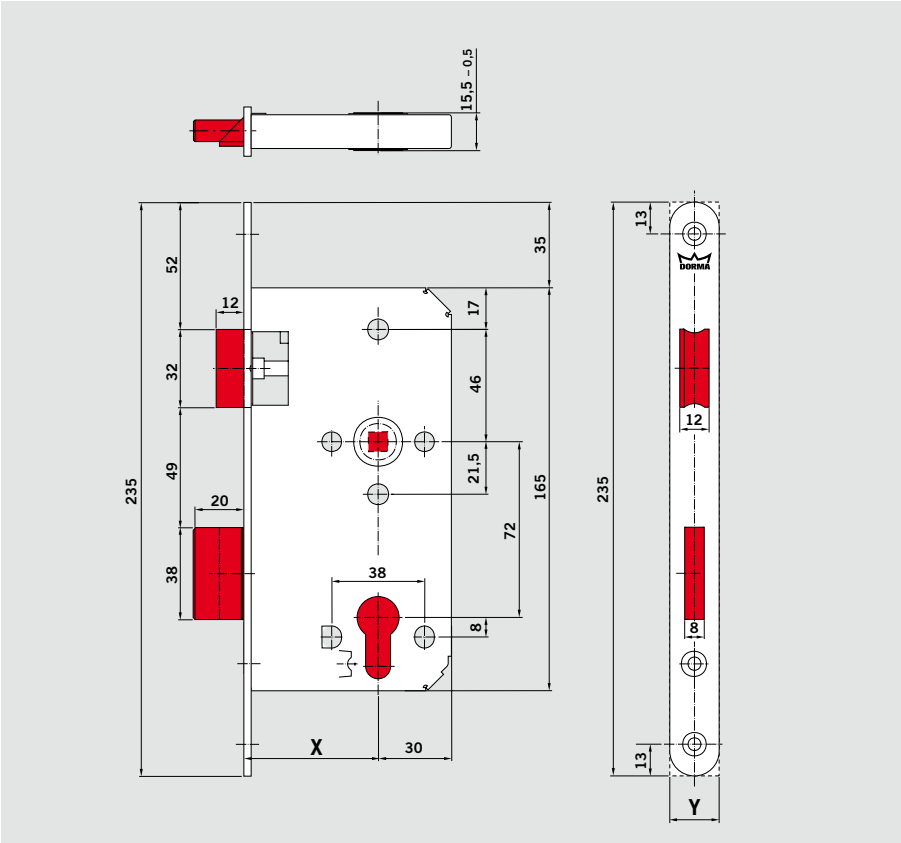

Possible variation

Backset: X

55 mm
60 mm
65 mm
70 mm
80 mm

Dimension of forend: Y

square 20 mm
24 mm
rounded 20 mm
24 mm

DORMA locks are prepared to be used with the levers of DORMA Beschlagtechnik

Mortice lock 275

Locks for bathroom doors, e.g. in office buildings

Features

Grade 2 – EN 12209
- Lock case size DIN 18251-1, closed case, zinc plated
- lock case prepared for thumbturn and standard fittings
- latch handing is reversible
- latch and dead bolt, zinc, nickel plated
- follower, steel blade, 8 mm square hole, mounted in drawn steel bushes and 8 mm bathroom follower
- centred forend, satin stainless steel 1.4301 / AISI 304, changeable

Recommended Strike plate: 20 **side: non-handed**

Classification EN 12209

2	S	8	0	0	G	3	K	G	2	0

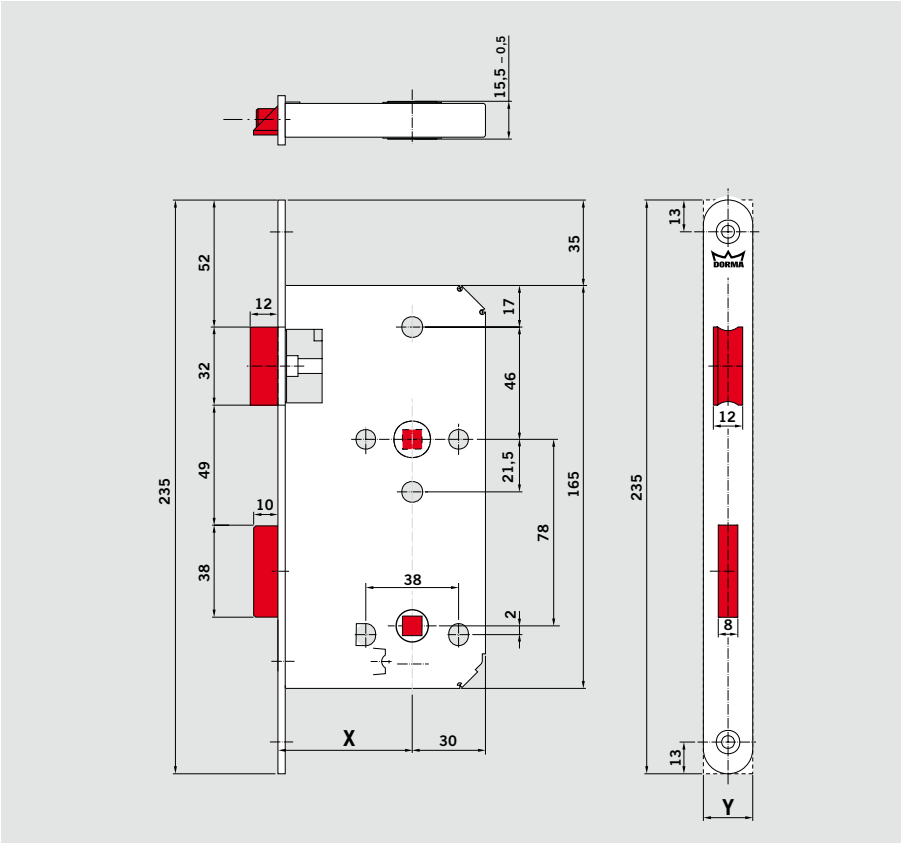

Possible variation

Backset: X

55 mm
60 mm
65 mm
70 mm
80 mm

Dimension of forend: Y

square 20 mm
24 mm
rounded 20 mm
24 mm

DORMA locks are prepared to be used with the levers of DORMA Beschlagtechnik

Mortice lock 278

Locks for interior and exterior doors, e.g. in office buildings

Features

Grade 2 – EN 12209
– Lock case size DIN 18251-1, closed case, zinc plated
– lock case prepared for Euro profile cylinder (DIN18252) and standard fittings
– dead bolt, zinc, nickel plated
– centred forend, satin stainless steel 1.4301 / AISI 304, changeable

Recommended Strike plate: 21 **side: non-handed**

Classification EN 12209

2	S	8	0	0	G	3	B	C	2	0

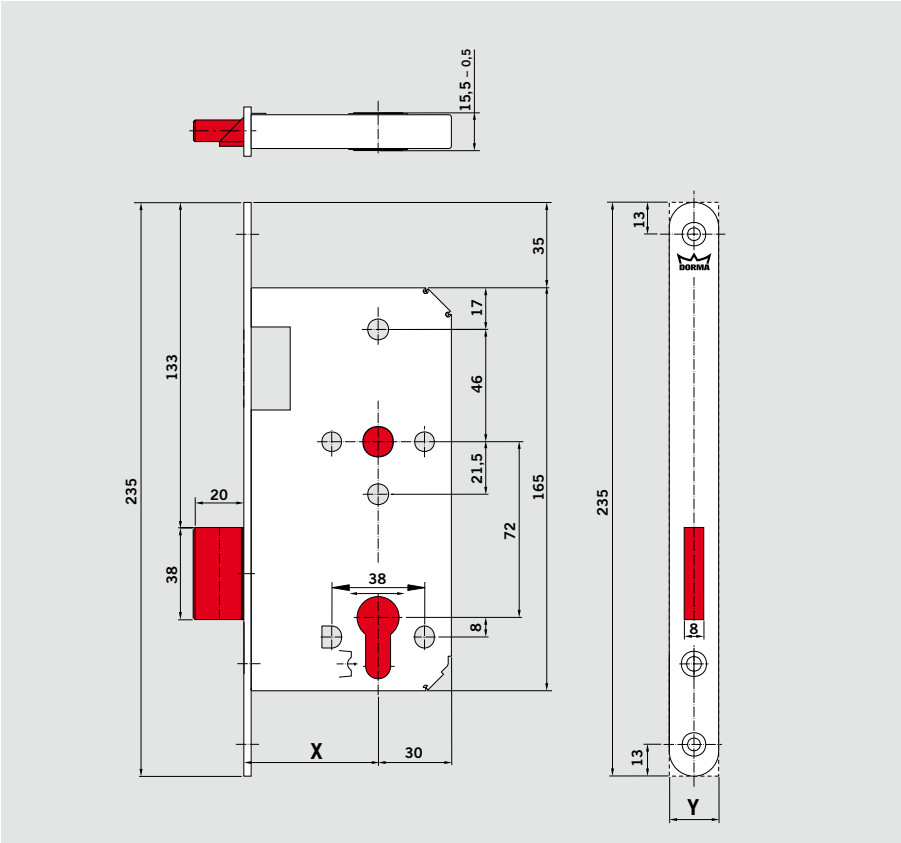

Possible variation

Backset: X
55 mm
60 mm
65 mm
70 mm
80 mm

Dimension of forend: Y
square 20 mm
24 mm
rounded 20 mm
24 mm

Mortice lock 279

Locks for interior and exterior doors, e.g. in office buildings

Features

Grade 2 – EN 12209
- Lock case size DIN 18251-1, closed case, zinc plated
- lock case prepared for standard fittings
- latch handing is reversible
- latch, zinc, nickel plated
- follower, steel blade, 8 mm square hole, mounted in drawn steel bushes
- centred forend, satin stainless steel 1.4301 / AISI 304, changeable

Recommended Strike plate: 23 **side: non-handed**

Classification EN 12209

2	S	8	0	0	G	3	K	G	2	0

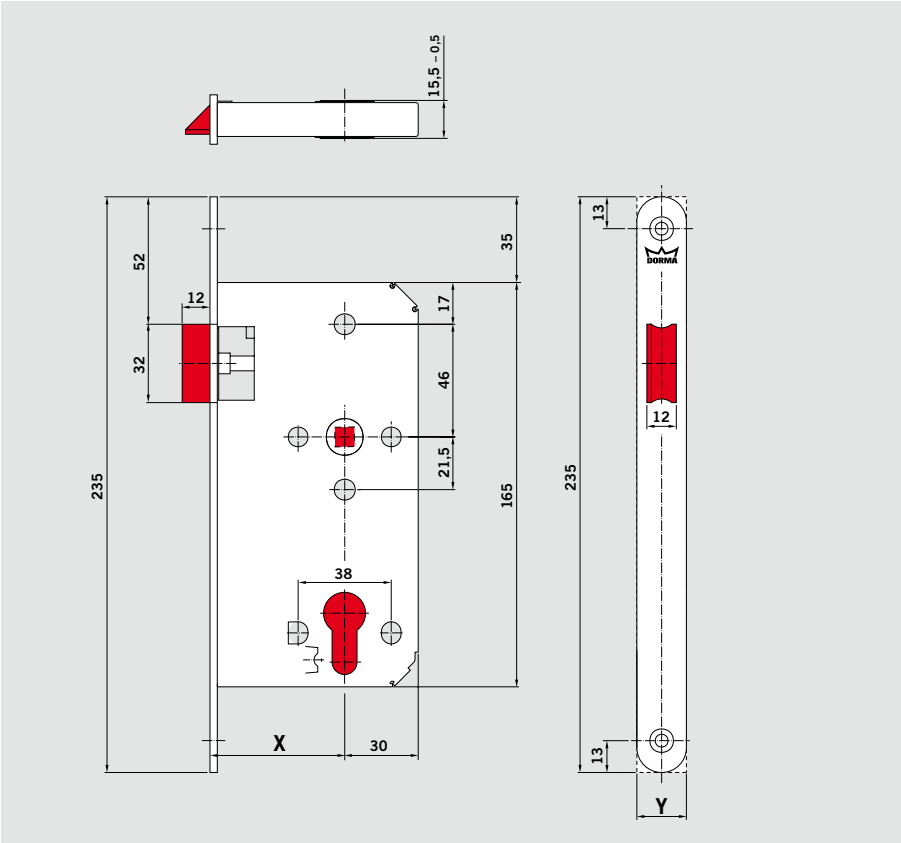

Possible variation

Backset: X

55 mm
60 mm
65 mm
70 mm
80 mm

Dimension of forend: Y

square 20 mm
24 mm
rounded 20 mm
24 mm

DORMA locks are prepared to be used with the levers of DORMA Beschlagtechnik

Mortice lock 208

Locks for interior doors, e.g. in office buildings

Features

Grade 2 – EN 12209
– closed lock case, zinc plated
– lock case prepared for Euro profile cylinder (DIN18252) and standard fittings
– dead bolt, zinc, nickel plated
– centred forend, satin stainless steel 1.4301 / AISI 304, changeable

Recommended Strike plate: 21 **side: non-handed**

Classification EN 12209

2	S	8	0	0	G	3	B	C	0	0

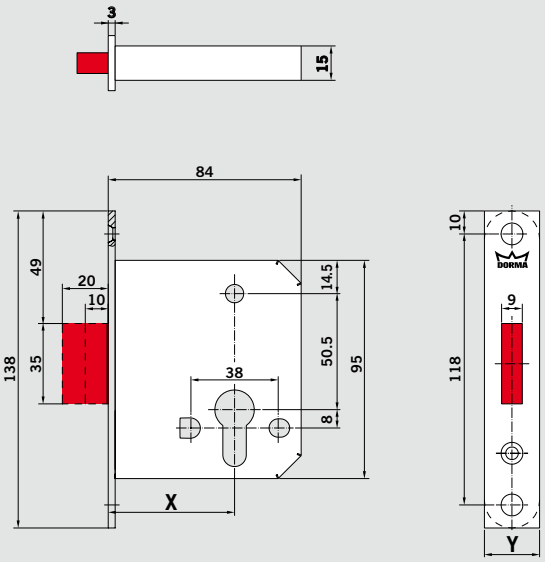

Possible variation

Backset: X
55 mm

Dimension of forend: Y
square 20 mm
24 mm
rounded 20 mm
24 mm

Mortice lock 209

Locks for interior doors, e.g. in office buildings

Features

Grade 2 – EN 12209
– closed lock case, zinc plated
– lock case prepared for standard fittings
– latch handing is reversible
– latch, zinc, nickel plated
– follower, steel blade, 8 mm square hole, mounted in drawn steel bushes
– centred forend, satin stainless steel 1.4301 / AISI 304, changeable

Recommended Strike plate: 23 **side: non-handed**

Classification EN 12209

2	S	8	0	0	G	3	B	0	2	0

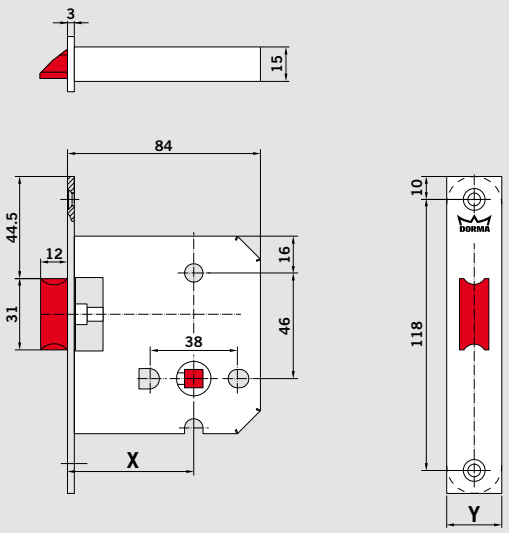

Possible variation

Backset: X
55 mm

Dimension of forend: Y
square 20 mm
24 mm
rounded 20 mm
24 mm

Mortice lock 232

Locks for interior and exterior swing doors, e.g. in office buildings

Features

Grade 2 – EN 12209
– Lock case size DIN 18251-1, closed case, zinc plated
– lock case prepared for Euro profile cylinder (DIN18252) and standard fittings
– Roller latch and dead bolt, solid metal alloy, nickel plated
– follower, steel blade, 8 mm square hole, mounted in drawn steel bushes
– centred forend, satin stainless steel 1.4301 / AISI 304, changeable

Recommended Strike plate: 27 **side: non-handed**

Classification EN 12209

2	S	8	0	0	G	3	B	C	0	0

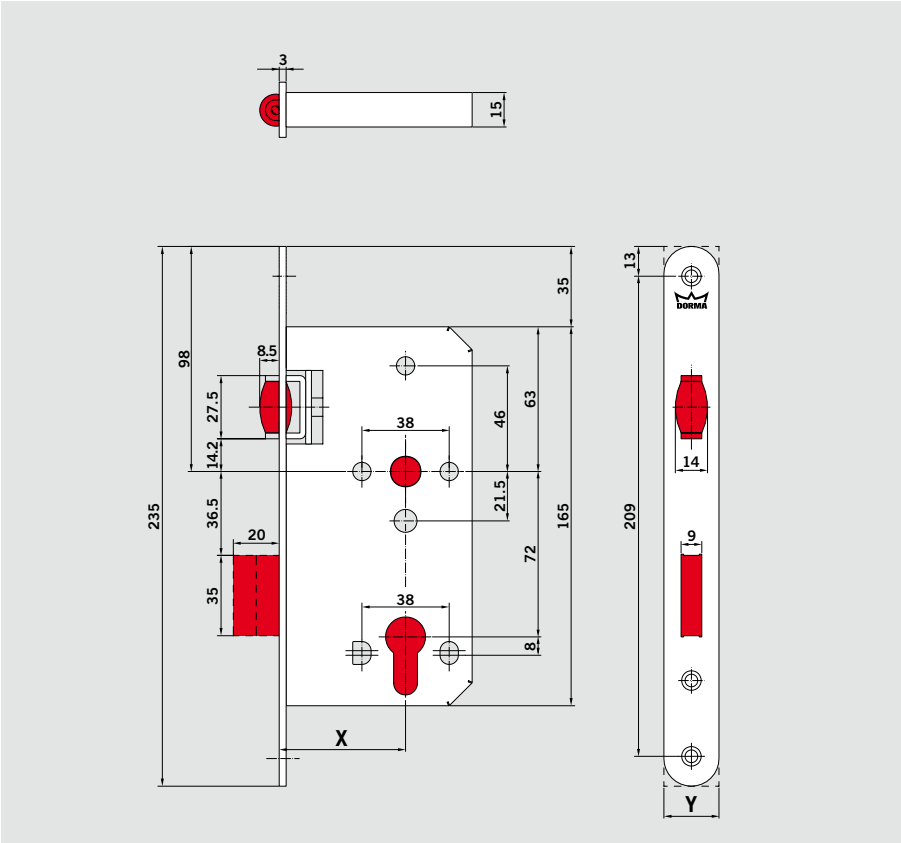

Possible variation

Backset: X
55 mm
60 mm
65 mm
70 mm
80 mm

Dimension of forend: Y
square 20 mm
24 mm
rounded 20 mm
24 mm

Mortice lock 233

Locks for bathroom doors, e.g. in office buildings

Features

Grade 2 – EN 12209
– Lock case size DIN 18251-1, closed case, zinc plated
– lock case prepared for thumbturn 8 mm
  and standard fittings
– dead bolt, zinc, nickel plated
– centred forend, satin stainless steel 1.4301 / AISI 304,
  changeable

Recommended Strike plate: 21 **side: non-handed**

Classification EN 12209

2	S	8	0	0	G	3	K	G	2	0

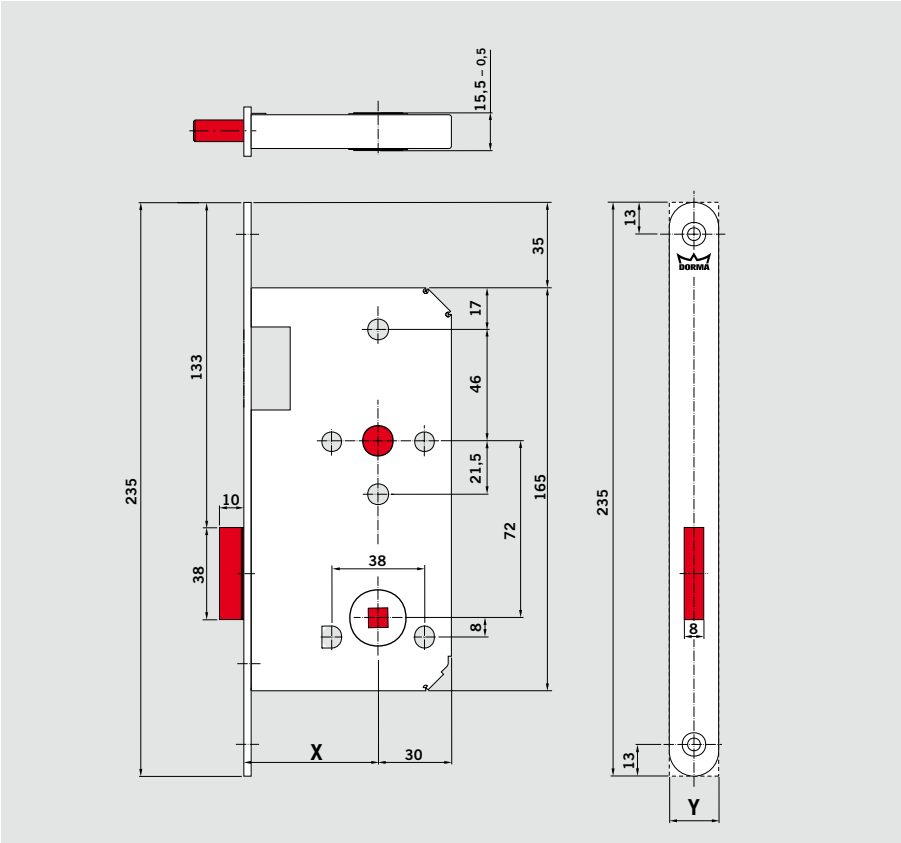

Possible variation

Backset: X
55 mm
60 mm
65 mm
70 mm
80 mm

Dimension of forend: Y
square 20 mm
24 mm
rounded 20 mm
24 mm

Mortice lock 234

Locks for interior doors, e.g. in office buildings

Features

Grade 2 – EN 12209
- Lock case size DIN 18251-1, closed case, zinc plated
- lock case prepared for Euro profile cylinder (DIN18252) and standard fittings
- latch handing is reversible
- latch, zinc, nickel plated
- follower, steel blade, 8 mm square hole, mounted in drawn steel bushes
- lockable by cylinder
- centred forend, satin stainless steel 1.4301 / AISI 304, changeable

Recommended Strike plate: 23 **side: non-handed**

Classification EN 12209

2	S	8	0	0	G	3	K	G	2	0

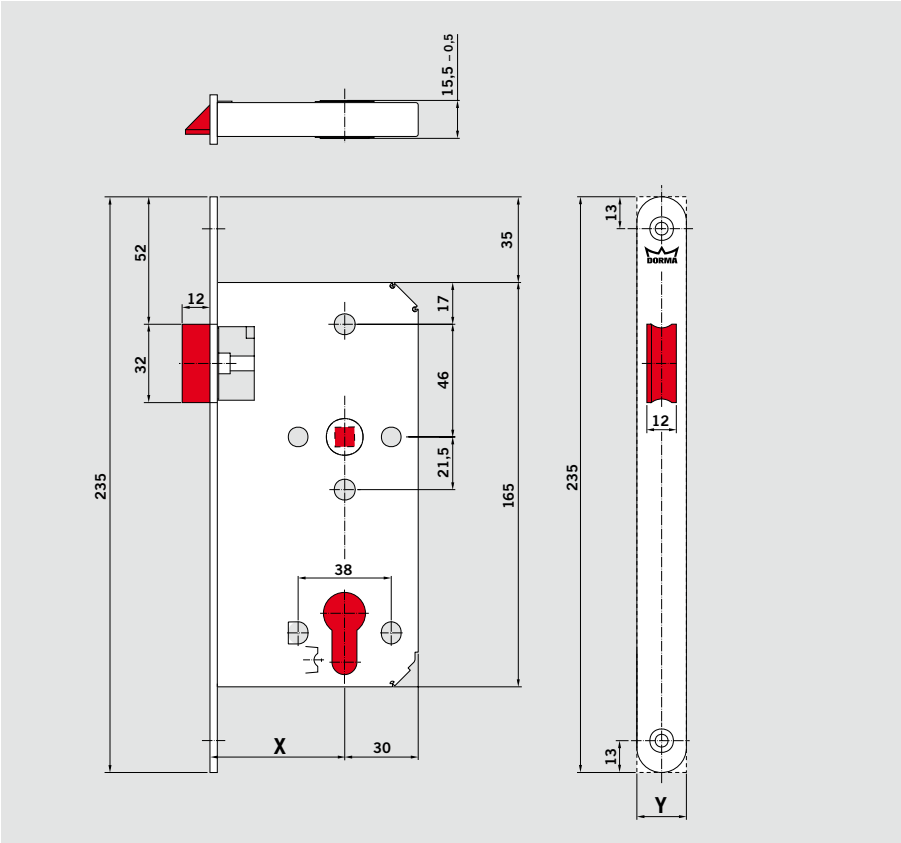

Possible variation

Backset: X

55 mm
60 mm
65 mm
70 mm
80 mm

Dimension of forend: Y

square 20 mm
24 mm
rounded 20 mm
24 mm

DORMA locks are prepared to be used with the levers of DORMA Beschlagtechnik

Mortice lock 235

Locks for bathroom doors, e.g. in office buildings

Features

Grade 2 – EN 12209
- Lock case size DIN 18251-1, closed case, zinc plated
- lock case prepared for thumbturn and standard fittings (c/c 72 mm)
- latch handing is reversible
- latch and dead bolt, zinc, nickel plated
- follower, steel blade, 8 mm square hole, mounted in drawn steel bushes and 8 mm bathroom follower
- centred forend, satin stainless steel 1.4301 / AISI 304, changeable

Recommended Strike plate: 20 **side: non-handed**

Classification EN 12209

2	S	8	0	0	G	3	K	G	2	0

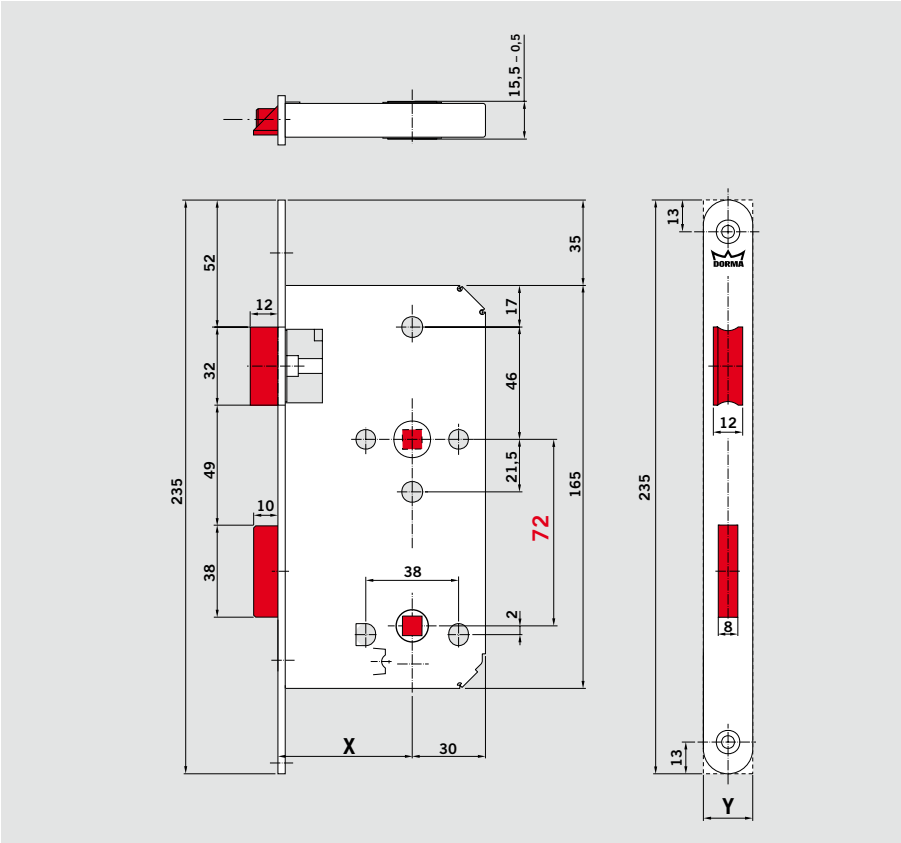

Possible variation

Backset: X

55 mm
60 mm
65 mm
70 mm
80 mm

Dimension of forend: Y

square 20 mm
24 mm
rounded 20 mm
24 mm

DORMA locks are prepared to be used with the levers of DORMA Beschlagtechnik

Strike plates Type 020

Material: satin stainless steel

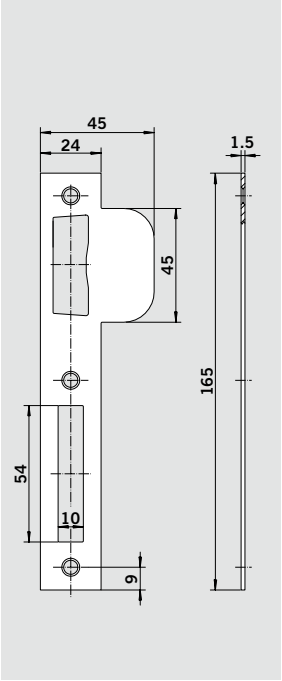

Strike plates Type 020-1

Material: satin stainless steel

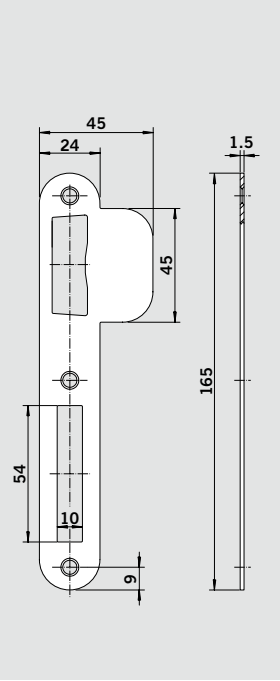

Strike plates Type 021

Material: satin stainless steel

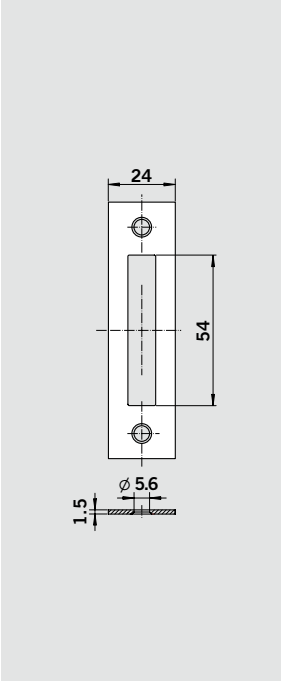

Strike plates Type 023

Material: satin stainless steel

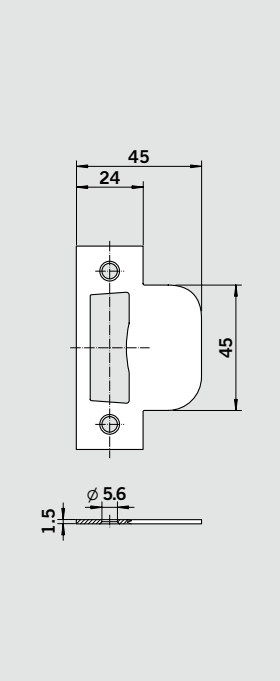

Compatibility with the previous program

Locks of the previous program can be easily replaced by the locks of the new program. The dimensions as well as the functions of the two programs are similar.
The figure below shows the compatibility of the two programs.

New program	Previous program
300 CE	
381	151-F
385	191-F
388	132-F
389	115-F
391	210
392	117
394	781
300	
371	151
375	191
378	132
379	115
200 CE	
281	752-F
285	790-F
288	532-F
289	515-F
290	116
200	
271	771
275	775
278	778
279	779

DORMA Mortice CE lock – PREMIER

Locks for interior and exterior doors and fire-rated doors, intended for public buildings, Grade 3 – EN 12209, approved for fire-rated doors with CE-certificate, Lock case size DIN 18251-1, Latch handing is reversible, Lock case prepared for standard fittings, closed case, zinc plated, black painted, Latch and deadbolt satin stainless steel, Reinforced deadbolt with hardened anti-saw pins, Deadbolt projection double throw 20 mm (bathroom / WC 10 mm), Clamp follower 8 mm, stainless steel, with separate bush bearing, Centred forend, satin stainless steel AISI 316

Lock type

( ) Europrofile cylinder with night latch function, 72 mm centres, with sleeves (381)
( ) Bathroom/WC, for WC knob – 8 mm, 78 mm centres, with sleeves (385)
( ) Deadbolt lock, Europrofile cylinder, with sleeves (388)
( ) Latch lock, with sleeves (389)
( ) Europrofile cylinder, anti-thrust latch and deadbolt, 72 mm centres (391)
( ) Europrofile cylinder, anti-thrust latch, 72 mm centres (392)
( ) Europrofile cylinder, anti-thrust latch, split follower, classroom function, 72 mm centres (393)
( ) Europrofile cylinder, with night latch function, backset 45 mm only, 85 mm centres (394)

Backset:	Forend width	Forend design
( ) 55 mm	( ) 20 mm	( ) Rounded ends
( ) 60 mm	( ) 24 mm	( ) Square ends
( ) 65 mm		
( ) 70 mm		
( ) 80 mm		
( ) 85 mm		

DORMA Mortice lock – PROJECT

Locks for interior and exterior doors, intended for public buildings, Grade 3 – EN 12209, lock case size DIN 18251-1, Latch handing is reversible, Lock case prepared for standard fittings, closed case with sleeves, zinc plated, black painted, Latch and deadbolt satin stainless steel, Reinforced deadbolt with hardened anti-saw pins, Deadbolt projection double throw 20 mm (bathroom / WC 10 mm), Clamp follower 8 mm, stainless steel, with separate bush bearing, Centred forend, satin stainless steel AISI 316

Lock type

( ) Europrofile cylinder with night latch function, 72 mm centres (371)
( ) Bathroom/WC, for WC knob – 8 mm, 78 mm centres (375)
( ) Deadbolt lock, Europrofile cylinder (378)
( ) Latch lock (379)

Backset:	Forend width	Forend design
( ) 55 mm	( ) 20 mm	( ) Rounded ends
( ) 60 mm	( ) 24 mm	( ) Square ends
( ) 65 mm		
( ) 70 mm		
( ) 80 mm		

DORMA Mortice CE lock – CONTRACT

Locks for interior and exterior doors and fire-rated doors, intended for office buildings, Grade 2 – EN 12209, approved for fire-rated doors with CE-certificate, Lock case size DIN 18251-1, Latch handing is reversible, Lock case prepared for standard fittings, closed case, zinc plated, Latch and deadbolt satin stainless steel, Deadbolt projection double throw 20 mm (bathroom / WC 10 mm), Clamp follower 8 mm, stainless steel, mounted in drawn steel bushes, Centred forend, satin stainless steel AISI 304

Lock type

( ) Europrofile cylinder with night latch function, 72 mm centres (281)
( ) Bathroom/WC, for WC knob – 8 mm, 78 mm centres (285)
( ) Deadbolt lock, Europrofile cylinder (288)
( ) Latch lock (289)
( ) Latch lock, Europrofile cylinder with night latch function, 72 mm centres (290)

Backset:	**Forend width**	**Forend design**
( ) 55 mm	( ) 20 mm	( ) Rounded ends
( ) 60 mm	( ) 24 mm	( ) Square ends
( ) 65 mm		
( ) 70 mm		
( ) 80 mm		

DORMA Mortice lock – STANDARD

Locks for interior and exterior doors, intended for office buildings, Grade 2 – EN 12209, lock case size DIN 18251-1, Latch handing is reversible, Lock case prepared for standard fittings, closed case, zinc plated, Latch and deadbolt zinc, nickel plated, Deadbolt projection double throw 20 mm (bathroom / WC 10 mm), Follower 8 mm, steel blade, mounted in drawn steel bushes, Centred forend, satin stainless steel AISI 304

Lock type

( ) Europrofile cylinder with night latch function, 72 mm centres (271)
( ) Bathroom/WC, for WC knob – 8 mm, 78 mm centres (275)
( ) Deadbolt lock, Europrofile cylinder (278)
( ) Latch lock (279)
( ) Deadbolt lock, small case, 55 mm backset only, Europrofile cylinder, latch and deadbolt satin stainless steel (208)
( ) Latch lock, small case, 55 mm backset only, latch and deadbolt satin stainless steel (209)
( ) Europrofile cylinder, roller latch and deadbolt, 72 mm centres (232)
( ) Deadbolt lock, for WC knob – 8 mm (233)
( ) Europrofile cylinder, latch and lockable handle, 72 mm centres (234)
( ) Bathroom/WC, for WC knob – 8 mm, 72 mm centres (235)

Backset:	**Forend width**	**Forend design**
( ) 55 mm	( ) 20 mm	( ) Rounded ends
( ) 60 mm	( ) 24 mm	( ) Square ends
( ) 65 mm		
( ) 70 mm		
( ) 80 mm		

DORMA

www.dorma.com

Door Control

Automatic

Glass Fittings
and Accessories

Security/Time
and Access (STA)

Movable Walls

Door Control Division worldwide

Central Europe
DORMA GmbH + Co. KG
DORMA Platz 1
D-58256 Ennepetal
Tel. +49 2333 793-0
Fax +49 2333 793-495

Australasia
DORMA Door Controls Pty. Ltd.
46-52, Abbott Road
Hallam/Victoria 3803
Australia
Tel. +61 3979 63555
Fax +61 3979 63955

China/Hong Kong
DORMA Door Controls
(Suzhou) Co. Ltd.
No. 9, Hong Feng Road
Suzhou Singapore Industrial Park
Suzhou, 215021
P.R. of China
Tel. +86 512 67612481
Fax +86 512 67614582

DORMA Door Controls Pte. Ltd.
Room 701, Technology Plaza
651 King's Road
North Point
Hong Kong
Tel. +852 25034632
Fax +852 28875370

Emerging Markets
DORMA GmbH + Co. KG
DORMA Platz 1
D-58256 Ennepetal
Tel. +49 2333 793-0
Fax +49 2333 793-495

DORMA Door Controls (Pty.) Ltd.
Kings Court
4A Mineral Crescent
ZA-2000 Crown/Gauteng
South Africa
Tel. +27 11 8300280
Fax +27 11 8300291

Far East
DORMA Far East Pte. Ltd.
No. 31 Gul Lane
Singapore 629425
Tel. +65 6268 7633
Fax +65 6265 7995

France
DORMA France S.A.S.
Europarc
42, rue Eugène Dupuis
F-94046 Créteil
Tel. +33 1 41942400
Fax +33 1 41942401

Gulf
DORMA Gulf Door Controls FZE
Jebel Ali Free Zone South
Plot No. S 20135
Road No. SW 301 G
P.O. Box 17268
Dubai – United Arab Emirates
Tel. +971 4 8020400
Fax +971 4 8869100 / 8869101

North America
DORMA Architectural Hardware
DORMA Drive, Drawer AC
Reamstown, PA 17567-0411
Tel. +1 800 5238483
Fax +1 800 2749724

Scanbalt
DORMA Sverige AB
F O Petersons Gata 24
SE-421 31 Västra Frölunda
Tel. +46 31 289520
Fax +46 31 281739

South America
DORMA Sistemas de Controles
para Portas Ltda.
Av. Piracema, 1400
Centro Empresarial Tambore
CEP 06400-933 Barueri/
São Paulo, Brasil
Tel. +55 11 46899280
Fax +55 11 46899215

South-East Europe
DORMA AUSTRIA GmbH
Pebering Strass 22
A-5301 Eugendorf
Tel. +43 6225 284880
Fax +43 6225 28491

South Europe
DORMA Italiana S.r.l.
Via. Canova 44/46
I-20035 Lissone (MI)
Tel. +39 039 244031
Fax +39 039 24403310

DORMA Ibérica, S.A.
Camino San Martin de la Vega, 4
E-28500 Arganda del Rey
(Madrid)
Tel. +34 91 8757850
Fax +34 91 8757881

UK/Ireland
DORMA UK Ltd.
Wilbury Way
Hitchin
GB-Hertfordshire SG4 0AB
Great Britain
Tel. +44 1462 477600
Fax +44 1462 477601

WN 053 794 51532, 09/09, Mortice Locks, GB, x. DD. xx/09 · Subject to change without notice